SEABY'S

COIN AND MEDAL

BULLETIN

OCTOBER, 1953

No. 425 (1953 vol., No. 10) **OCTOBER, 1953**

SEABY'S COIN AND MEDAL BULLETIN

Published by B. A. SEABY LTD. *Numismatic Experts*

(*Directors:* H. A. SEABY, E. A. E. PORTER, Major H. C. V. PORTER, O.B.E., P. J. SEABY)

65, GT. PORTLAND STREET, LONDON, W.1
[Nearest Underground station:—OXFORD CIRCUS]

Telephone: LANgham 3677 and 4160
Telegrams: "Numismatic, Wesdo, London." Cables: "Numismatic, London."

Office Hours: 8.30 a.m. until 5 p.m. (Saturday 8.45 a.m. until 12.15 p.m.)

Subscription Price: 1953, Jan. to Dec., 7/6; or Nov. 1953 to Dec. 1954, 8/9
Thick paper Binding Cases for this Bulletin—1/9 each, postage 3d. extra.
Cloth Bound copies of the complete Bulletin, 1950, 1951, and 1952, 10/- each.

CORONATION MEDALS.

CM3. Medal ($1\frac{1}{2}''$ diameter) designed by the well-known artist Paul Vincze, of fine workmanship. *Obv.* Coronetted head of Her Majesty, as on front cover. R. COMMEMORATING THE CORONATION, allegorical figure kneeling l. cultivating the heraldic flowers, rose, shamrock, thistle and leek, JUNE 2ND 1953 in field.

(a) In 18 carat gold, limited to 25 numbered and hall-marked copies *Inland* £46/10/-, *Overseas* £30 ($85)
(b) In 9 carat gold *Inland* £29, *Overseas* £17/10/- ($50)
(c) In silver, oxidised *Inland* 63/-, *Overseas* 47/6 ($6.50)
(d) In bronze *Inland and Overseas* 10/6 ($1.50)

CSP. "Souvenir Plaque" on black plastic mount with easel back. H.M. QUEEN ELIZABETH AND H.R.H. THE DUKE OF EDINBURGH, conjoined busts of H.M. the Queen and of H.R.H. the Duke of Edinburgh to left.

(a) In Hall-marked silver, oxidised *Inland* 60/-, *Overseas* 45/- or $6.50
(b) In silver coloured metal, oxidised *Inland and Overseas* 25/-

(*See also both sides of back cover*)

BACTRIAN AND INDO-GREEK COINAGE.

By Lieut.-Col. J. Kozolubski, M.A. (Warsaw)

XXI. Agathocleia and Strato I.

circa 145-140 B.C.

The first bronze coin of Agathocleia brought from Afghanistan by Sayyid Karamat Ali and sold with his collection to Dr. Swiney was published by James Prinsep in 1836. At this time he could not yet fully decipher the Kharoshthi legend of the reverse, and therefore he neither mentioned Strato nor did he discuss the connection between Agathocleia and Strato, both linked by the legends on this coin. The epithet of Agathocleia " Theotropos " in the Greek legend of the obverse puzzled Prinsep and other students. Prinsep translated it as " god-nourisher," Lassen as " godlike," and H. H. Wilson as " servant of god." Prinsep concluded that it must have been coined for a queen-mother in allusion to her royal offspring.

The first inferences as to the period of her reign and the location of her kingdom were very vague. Lassen, supported by Grotefend, classed her after Apollodotus and Diomedes. H. H. Wilson saw in the sitting Heracles on the reverse of her coin a link connecting her with Euthydemus I, but considering the square shape of the coin, the Kharoshthi legend on the reverse, and the irregularity of the Greek lettering, he came to the conclusion that she must have been of a later date.

When Cunningham was writing his " Coins of Alexander's Successors," only four specimens of the same bronze coin of Agathocleia were known. Cunningham also connected Agathocleia with the family of Euthydemus on the strength of her reverse type (Heracles seated on a rock with his club resting on his knee) which is similar to that on the silver coins of Euthydemus I. He thought her to have been a daughter or a niece of Demetrius I who had married Strato I and thus united two rival families ; these may have been either two branches of the family of Euthydemus or the families of Demetrius and Eucratides. According to Cunningham Strato may have been a son of Demetrius, who had married his cousin and niece of Demetrius I, Agathocleia. In that case their marriage would have united the two rival branches of the Euthydemids, giving them strength in their struggle against Eucratides.

If, on the other hand, Strato has been a son or brother of Eucratides, his marriage to a daughter or to a niece of Demetrius would have signified the conclusion of peace between two ruling families, a concordat strengthened by the marriage between two of their members.

Cunningham suggested that the royal descent of Agathocleia and the importance of her marriage accounted for her portrait appearing on the coinage. He failed, however, to explain why Agathocleia was accorded the place of honour on the coin, the obverse with the Greek legend, while her husband Strato contented himself with the reverse and the Kharosthi legend. Her title " Theotropos " Cunningham considered to be derived in some way from the title " Theos " given to Euthydemus I on the memorial coins of Agathocles.

Gardner also regarded Agathocleia as the wife of Strato I, and a king's daughter or heiress, otherwise her name would not have appeared on the coinage. He thought that she may have been a grand-daughter of Agathocles or otherwise related to him.

Prof. Rapson was of a different opinion from his predecessors (*Corolla Numismatica*, p. 245-58, and *Cambridge History of India*, I, p. 552). He suggested that Agathocleia was not the wife, but most certainly the widowed mother of Strato who acted as régent during his minority. Rapson's suggestion explained Agathocleia's portrait on the obverse of the joint coins and her later disappearance from the coinage of Strato. According to Rapson Agathocleia's name suggested her connection

with the family of Pantaleon and Agathocles, and he considered it by no means improbable that she was the wife of Menander and the regent of his kingdom after his death, although it cannot be proved definitely.

All these conjectures and suggestions of his predecessors were developed by Dr. Tarn and built into a uniform construction. Dr. Tarn was certain of the descent of Agathocleia from Euthydemus I for she proclaimed it by using Euthydemus' coin-type of Heracles seated on rock. According to dates she could have been his grand-daughter through Demetrius I, or through Apollodotus I (if he was a son of Euthydemus I), for Agathocleia's son Strato I used the coin-types of Apollodotus I (Apollo and tripod). In default of exact information Dr. Tarn preferred to assume that Agathocleia was the daughter of Demetrius I, and sister to Agathocles.

Dr. Tarn supposed that Agathocleia was the wife of Menander. She may have married him either directly after her father's death and the retreat of Menander from Pataliputra, somewhere about 166 B.C., or perhaps later, after the death of Apollodotus, when Menander was left as the sole support of the Euthydemid cause and the only effective power able to oppose Eucratides in India. Menander benefitted by this marriage with the scion of the house of Euthydemus, for it must have given him the legitimacy of a heir to the kingdom of Demetrius.

Computing the ages of Demetrius I and of his sons, and their probable dates of birth, Dr. Tarn assumed that Agathocleia was born somewhere between 195 and 190 B.C., being probably younger than Agathocles. She must have been 24 to 30 years old at the time of her marriage to Menander, and her son Strato must have been something between 12 and 15 years old, when at the death of Menander Agathocleia assumed the regency for her minor son.

Dr. Tarn believed that the regency of Agathocleia, the first to be noted in the Hellenistic world—must have lasted for three to five years until the coming of age of Strato. It was probably at his eighteenth birthday that Strato assumed the rule marking that event with the issue of coins with his portrait only. The regency of Agathocleia must have lasted some years as she had time to strike two issues of coins in her name,—the first with her name on the obverse, and Strato's on the reverse, and the second with jugate busts of her son and herself on the obverse.

Dr. Tarn had also an explanation for the unusual epithet "Theotropos" of Agathocleia which he translated as "godlike." He regarded it as a poetical creation of some court poet, suitable for a hexameter verse, and used as an "epitheton ornans" in a poem, describing Agathocleia. The queen liked it and for this reason had displayed this extraordinary word on her coinage. She had no precedents to follow or to imitate, and she did not want to copy the titles of her male predecessors.

Some arguments in favour of Agathocleia being the mother of Strato and wife of Menander were offered by Mrs. Agnes Baldwin Brett in her paper on "*Indo-Bactrian Coins acquired by the American Numismatic Society in* 1947" (*Museum Notes*, III, 1948). Mrs. Brett pointed to the extreme youth of Strato shown in his portrait not only on coins together with Agathocleia, but also on his coins with his portrait alone which evidently succeed the coinage of Agathocleia alone and that of Agathocleia and Strato. These coins of young Strato cannot be ranged after the coins with his later and more mature portrait, therefore Strato in his first series was shown rather with his mother than with his wife.

The question of Agathocleia's husband was handled very ingeniously by Mrs. Brett. Agathocleia had used the Pallas hurling thunderbolt type for the reverse type of her tetradrachms, and Mrs. Brett thought that it could be assumed that as queen-regent for her son she adopted the reverse type of the king from whom her power was derived. If this should be correct, the king could only have been Men-

ander who had used the Pallas type on his coinage. The supposition that Agathocleia was Menander's widow seems therefore not unlikely.

The coinage of Agathocleia is represented as follows :—

(A) Coins with the name of Agathocleia alone on the obverse.

Sa Ta Stra Sa Ka Mi Dhra Sa Ra Ta Tra Sa Ja Ra Ha Ma

Fig. 121.

233. Æ. *Drachm.* Wt. 34 grs. Size 19-16 mm. (Fig. 121).

Obv. ΒΑΣΙΛΙΣΣΗΣ ΘΕΟΤΡΟΠΟΥ (above), ΑΓΑΘΟΚΛΕΙΑΣ (below). Diademed and draped bust of the queen to r.

R. *Maharajasa tratarasa dhramikasa* (above), *Stratasa* (below). Diademed warrior standing r., with buckler and sword, carrying spear over left shoulder, extending his r. arm in a gesture of command ; in field to r. mgr. No. 116.

On some coins the name of the queen is spelt ΑΓΑΘΟΚΛΕΑΣ.

Fig. 122

234. Æ. □ Wt. 129-126 grs. Size 26-20 × 19.5-18 mm. (Fig. 122).

Obv. ΒΑΣΙΛΙΣΣΗΣ (l.), ΘΕΟΤΡΟΠΟΥ (top), ΑΓΑΘΟΚΛΕΙΑΣ (r.). Draped bust of helmeted Pallas r.

R. *Maharajasa* (r.), *tratarasa* (top), *dhramikasa Stratasa* (l.). Heracles l., seated on rock, holding in r. hand club resting on r. thigh ; in field to l. mgr. No. 116.

The name of the queen is also spelt ΑΓΑΘΟΚΛΕΑΣ.

(B) Coins with the names of Strato and Agathocleia on the obverse.

Fig. 123.

235. Æ. *Tetradrachm.* Wt. 144.5-140 grs. Size 28-26.65 mm. (Fig. 123).

Obv. ΒΑΣΙΛΕΩΣ ΣΩΤΗΡΟΣ ΣΤΡΑΤΩΝΟΣ (above), ΚΑΙ ΑΓΑΘΟΚΛΕΙΑΣ (below). Jugate busts of Strato and Agathocleia to r., diademed and draped.

R. *Maharajasa tratarasa dhramikasa* (above), *Stratasa* (below). Pallas standing l., aegis on l. arm, hurling thunderbolt; in field to l. mgr. Nos. 116 or 117.

The name of the queen is also spelt ΑΓΑΘΟΚΛΕΑΣ and ΑΓΑΘΟΚΛΕΟΥΣ.

(C) Coin with the names of Strato and Agathocleia on both sides.

236. ÆR. *Tetradrachm.* Wt. 140 grs. Size 27 mm.

Obv. Similar to the preceding.

R. *Maharajasa tratarasa Stratasa* (above), *Agathukriäe* (below). (Fig. 124). Similar to the preceding; in field to l., mgr. No. 117.

Fig. 124.

The reverse-types are different for every denomination. Pallas hurling the thunderbolt of the tetradrachm is a type of Menander and was explained by Mrs. A. Baldwin Brett as referring to Agathocleia's and Strato's family ties linking them with Menander and giving the seal of legitimacy to their rule.

The reverse type of the drachm is strongly suggestive of the helmeted warrior on the bronze coin of Menander; both warriors are armed with shield and spear and both are extending their right arms pointing to something in a gesture of command. They differ only in one point: Menander's warrior is helmeted, Agathocleia's—diademed. Probably also both are meant to represent the king, whose name appears in the legend, the helmeted warrior being Menander, the diademed being Strato.

The Heracles type of the copper coin is copied from the coinage of Euthydemus, and all the authorities agree that undoubtedly it proclaimed the royal descent of the queen and her son from the Euthydemids.

The portraits on the drachm and tetradrachm show Agathocleia herself as a mature woman just of the age to be the mother of a son of 15-18 years old. As to the bust of the helmeted Pallas on Agathocleia's copper coins some authorities were inclined to see in it the portrait of Agathocleia. Some even believed that Agathocleia was represented as Pallas also on the coins of her husband Menander and concluded that she had kept that type also for her coins. It is very difficult to prove the likeness of Pallas to the small portraits of Agathocleia on her drachms and tetradrachms, as the bronze coins known to us are too worn. In any case the use of an almost identical bust of Pallas as a coin-type by Menander and Agathocleia should be another proof of the connection between them.

The peculiar arrangement of the legends is puzzling as on all her coins but one the name of Agathocleia only appears on the obverse in the Greek legend. It seems, as Dr. Whitehead observed, that the dynastic or family claims of Agathocleia were not supposed to be the concern of her Indian subjects.

A plausible explanation of this unusual feature was given by Gen. Haughton in his paper *The Silver Coinage of Strato and of Strato and Agathocleia* (Num. Chron. 1948). Gen. Haughton pointed out that in ancient times people generally, and the Orientals especially, did not approve of the rule of a woman as it was liable to lead to intrigues, favourites and an unsettled state of affairs. On the first coin of Agathocleia, the drachm, struck perhaps when Strato was but a child, the Greek legend proclaimed the queen Agathocleia as regent, a fact probably very well known to all her Greek subjects. But the reverse, with the name of the legitimate male heir

Strato and his title of king, had, according to Gen. Haughton, to reassure her Indian subjects as to the merely temporary nature of her position as queen.

The position seems to have changed by the time of the issue of the tetradrachm with the conjugate busts of Strato and Agathocleia. Strato here seems to have been older, approaching the age, as Gen. Haughton puts it, "when he might be impatient—or others impatient for him—to assume full and independent authority." Gen. Haughton suggested, that perhaps Strato on attaining the age of eighteen may have been granted some limited powers, just as in recent times it happened with young Maharajas at his age.

Gen. Haughton drew attention to the fact that Agathocleia has dropped the title of " queen " from the legend on this coin. His suggestion is that this may have been intended to reassure doubters about the eventual succession of the legitimate heir.

Nevertheless, Agathocleia's effigy still appears on the obverse, and Gen. Haughton believed that it was due to the fact that the son had not yet assumed full powers, or else was merely due to a woman's reluctance to resign for ever her royal position, or possibly to an act of courtesy and gratitude by the son towards his mother.

It can, in any event, be accepted that Agathocleia was the mother of Strato I, for whom she was ruling his kingdom during his minority. Probably she was the wife of Menander, and her coin-types point to her Euthydemid descent through Demetrius or Apollodotus I. Perhaps she was also the mother of Apollodotus II, who used, as did Menander and Strato, the reverse-type of fighting Athena. If that was the case then it can be assumed that she named her second son after her father, Apollodotus I.

We have seen that the regency of Agathocleia did not last very long, six years perhaps or even less. She must have disappeared not long after the first issue of tetradrachms of Strato with the jugate busts, as the next issue of coins with Strato's bust alone shows a very young face still, a face that is not much older than that on the tetradrachms with his mother.

NOTES ON DALTON'S AND HAMER'S "PROVINCIAL TOKEN COINAGE OF THE EIGHTEENTH CENTURY."

By Arthur W. Waters.

Abbreviations :—

G.T.T. indicates " Genuine Trade Tokens."

ADDENDA. *Page* 537.

8. **Devonshire.** *Plymouth.* Medal struck on the visit of George III.

1 bis & 12. **Dorset.** *Weymouth.* Medals struck on the visit of George III.

33 bis. **Essex.** *Hornchurch.* A new die variety.

66 & 67. **Gloucestershire.** *Cheltenham.* Medals struck on the visit of George III.

Page 538.

68 to 77. **Gloucestershire.** *Cheltenham.* Struck on the visit of George III. All were struck on brass flans with scalloped edges to prevent them being used as gold coins.

Page 539.

115 to 117. **Hampshire.** *Southampton.* Medals struck on the visit of George III.

4 bis I & bis II. **Hertfordshire.** *Bishops Stortford.* New die varieties.

38 bis. **Lancashire.** *Lancaster.* New variety of a forged die.

68 bis. *Liverpool.* This is of interest as it is the rev. die of No. 63 without the bullrushes at the side of the shield; struck with a new obverse.

Page 540.

85. **Lancashire.** *Liverpool.* Now first illustrated, see page 75.

87 bis. *Liverpool.* A new die variety.

14 bis. **Middlesex.** *Delaporte's* New dies of the early ticket.

30 bis. *Hotham's.* A new early ticket. Dr. Johnson who died in 1784 mentions having bought his hats from this firm.

31a. *James'.* Struck on a larger flan.

181 bis. *National.* George III, a new reverse. There was sold in the Norman sale, July 1903, Lot 446, a medal with this Frogmore reverse, the obverse having a portrait of Queen Charlotte. George III gave Frogmore House and grounds to his queen where she at times resided and had a private printing press installed there. The king's granddaughter, Queen Victoria, built a mausoleum at Frogmore for Prince Albert and in it she herself was afterwards buried.

Page 541.

184 bis I & 184 bis II. **Middlesex.** *National.* Two medals.

204 bis. *Hardy's.* New die variety.

213 bis I & 213 bis II. *Pitt.* Two new medals.

231. *Stag.* Now first illustrated, see page 118.

233 bis & 234 bis. *Slave.* Two new anti-slavery medals.

Page 542.

235 bis to 238 bis. **Middlesex.** *Slave.* New varieties of the slavery medals.

240 & 241. *Political.* Now first illustrated, see page 120.

245 bis. *Washington.* This is the die of No. 245 altered with the date, etc. under the bust.

Page 543.

266 and 274 bis. **Middlesex.** *Burchell's.* No. 266, now first illustrated and No. 274 a new die.

352. *Lackington.* A correction showing the new die.

583 bis. *St. Brides.* A society ticket, not a token.

676 bis. *Spence's.* This is described by Spence in his small list of these tokens. No one has so far discovered one. See my own book on his trial, 4to, 1917.

690. *Spence's.* This shows the first state of the die before the date 1790 was partly obliterated.

Page 544.

912. **Middlesex.** *Whitefield's.* This is the illustration of the proof mentioned at No. 912, it should, however, read 909 not 911.

944 bis. *George III.* This obverse is from a card counter die. The lion on the rev. is used nowhere else.

1005 bis. *Cabbage Society.* The penny die of No. 227 struck on a halfpenny flan.

1144. *George III.* Now first illustrated.

1132 to 1135 bis. *George III.* Three small medals, not tokens.

Page 545.

25 bis. **Sussex.** *Hastings.* A new die of Tebays' token.

4 bis. **Warwickshire.** *Birmingham.* A medal using the die of No. 4.

221 bis. *Stanhope.* This reads "*O* : as No. 200," but this cannot be correct, perhaps it should read "as No. 221. Priestley."

Page 546.

332 bis. **Warwickshire.** *Wilkinson.* The bust without any inscription was never completed for some reason and the die occurs nowhere else.

472 bis. *Wilkinson.* Struck at the factory of Boulton and Watt's. The rev. die of the George and Blue Boar Coach Office could be used as that token was also made at the same factory.

42 bis & 45 bis. **Worcestershire.** *Worcester.* Card counters, not tokens.

19. **Yorkshire.** *Hull.* A new obverse die of No. 19.

Page 547.

21 bis I & 21 bis II. **Scotland, Forfarshire.** *Dundee.* Swap's two new rev. dies.

128 bis. **Lothian.** *Edinburgh.* Thompson's new dies.

232 bis. *Musselbergh.* A new token.

1 bis & 4. bis. **Ireland, Drogheda.** *Drogheda.* New dies of these copies of the H.M. Co.'s tokens.

283 bis. **Co. Dublin.** *Dublin.* New variety of No. 282 bis, page 497. "No. 283 bis" is an error.

443 bis. *Dublin.* The illustration of this number described on page 519.

2. **King's County.** *Tullamoore.* The rev. die described on page 519.

1. **Not Local.** This rare token came from the Norman collection, it was sold at Sotheby's in Lot 133 on March 5th, 1906.

Page 548.

Ireland, Co. Dublin. *Dublin,* etc. Various varieties of new dies.

Page 549.

9 bis & 49 bis. **Cheshire.** *Macclesfield.* New dies.

119 bis II. **Wales, Anglesey.** New dies.

36. **Scotland, Lanarkshire.** *Glasgow.* This rev. looks like a new die of No. 36 on page 417.

3. **Renfrewshire.** *Greenock.* This corrects the illustration on page 437.

3 bis & 7 bis **Not Local.** New dies, see page 438.

33 bis, etc. **Ireland, Co. Dublin.** *Dublin.* New dies of the H.M. Co.'s tokens.

Pages 550 *and* 551.

123 bis to 148 bis. **Ireland, Co. Dublin.** *Dublin.* New dies of the H.M. Co.'s tokens.

70 bis. **Wales, Anglesey.** New dies of the P.M. Co.'s penny.

EDGE READINGS ON TOKENS.

A few remarks respecting edge inscriptions may be of interest. In the first place these edges were put upon the blanks before the sides were struck, this explains why some tokens occur with different edges owing to the blanks becoming mixed. It is just possible that the manufacturers on executing an order for a token had some

inscribed blanks left over. These unused blanks were then sold in bulk to another manufacturer so as to save the trouble of resmelting the metal. Skidmore, for instance, must have bought a large quantity of halfpenny blanks from Kempson, inscribed COVENTRY TOKEN, for this edge reading occurs on many of Skidmore's own Building tokens of Middlesex and other tokens coming from his Clerkenwell factory.

The coining press made to strike the tokens and edges at one operation was a much more complicated machine than that for striking the faces only. Only the biggest manufacturers had such machines. They would have been used at Boulton's Soho mint, and possibly at the Parys Mines factory at Birmingham. At the smaller factories the striking was effected in two operations.

The older style of coining press is shown on Spence's ½d, page 169, No. 740. A more up to date press with a wheel top on Lutwyche's ½d, page 284, No. 219, and another style more like that of Spence's on his ¼d, page 312, No. 482.

Some tokens are only found with their rightful edges, and these particular edges are never found upon any other tokens as none of these edge inscribed blanks appear to have been mixed with other blanks.

This is a list of such tokens :—

Northiam, J. Foller	*Frant*, G. King	*London*, M. & H. Oppenheim
Maldon, W. Draper	*Hythe*, R. Shipden	*Hawkhurst*, G. Hider
Deptford, T. Haycraft	*Ipswich*, W. Manning	*Yarmouth*, W. Absolon.
Brookland, T. King	*Norwich*, J. Rook	*Newent*, J. Morse
Tenterden, I. & T. Cloakes	*Bungay*, S. Prentice	*Portsmouth*, J. Brent

There may be a few other instances.

Atkins gives an Index of the various edges and there are some 322 varieties recorded.

Many of the tokens are now recorded as being described by Atkins but now unknown, these pieces mainly have Conder's numbers to them. It is just possible that Atkins had never seen these actual specimens himself.

REMARKS ON THE IMITATION REGAL COPPER COINS

Mr. James Atkins gives at the end of his 18th century tokens an interesting list of the Imitation Regal copper coins ; that is, copies more or less like the Regal copper coins of the time. These were made owing to the curious state of the law at that date. A London Police Magistrate, Peter Colquhoun, in his "Police of the Metropolis 1796," explains how these Imitation Regals came to be struck ; he states :—

" The copper currency made in imitation of the current coin, there are many different kinds, immence quantities have been made in London, Birmingham, Bilston, and Wolverhampton. They are sold in packets at the rate of 28/- to 30/- worth for a good guinea. One well known coiner has been said to have finished from sixty to eighty pounds sterling in these Imitation regal coppers, in a week.

Fraudulent diesinkers are to be found in London and Birmingham, who are excellent artists ; able and willing to copy any coin, from English Gold downwards. The delinquents therefore have every opportunity and assistance they can wish for ; together with their accurate knowledge of the deficiency of the laws relating to the British Coinage, which is where the real danger lies.

So systematic, indeed, has this nefarious traffic become of late, that the great dealers execute orders for the town and country, with the same regularity as manufacturers in fair branches of trade. Scarcely a waggon or coach departs from the

Metropolis, which does not carry boxes and parcels of base money, to the Camps, Seaports, and manufacturing towns.

The Act, 2 Geo. III, cap. 40, gives a power to Magistrates to issue their warrants to search for tools and implements used in the copper coinage (with regard to gold and silver no such power is given) but, no punishment whatever can be inflicted by any existing law on the Owner or proprietor of any such tools for the making of copper money, nor upon the person in whose house they are found. If, when such a search is made, there should be found only evasive halfpence and farthings, so as not to be of exact similitude to the Regal Coinage, the Act in question is defeated; as the crime of felony does not attache to offences short of coining copper money of the similitude of the current coin of the realm.

The coinage of base copper goes on with impunity; because it is owing to the carelessness of the parties themselves if ever they permit the law to reach them.

The laws now in being gives no power to seize counterfeit halfpence; either in the hands of the manufacturers or dealers, who keep a kind of open market at their own houses. Of the copper coin, the quantity of counterfeits at one time in circulation might be truly said to equal three fourth parts of the whole amount, independent of the daily accession.

The trade of dealing in counterfeit coin acquires its greatest vigour towards the end of March; for the Lotteries are then over, and swindlers, gamblers, pretended dealers in horses, hawkers, and pedlars go into the country, carrying with them considerable quantities of base money, by which means they are able to extend the circulation by cheating and defrauding the country people."

In James Atkins's List there are described 450 halfpence and 41 farthings. These were mainly his own collection and it was made nearly 100 years after they were in general circulation. By the remarks of Colquhoun as quoted above it shows how serious was the condition of the copper coin at the time the 18th Century tokens were being issued.

In the Miller Sale at Sotheby's on Feb. 25, 1829, there were sold in one lot a collection of these Imitation Regals, there were 310 specimens so he must have been a very keen collector of them. They made 5/- and were bought by M. Young.

"HOLEY DOLLARS" — A QUESTIONNAIRE.

The assistance of Numismatists is being sought in the work of listing all "Holey Dollars" of Australia. Any information will be gratefully received by J. HUNT DEACON, F.R.N.S., c/o National Gallery, North Terrace, South Australia.

Information required :—

Original Coin. (1) Date; (2) Mint; (3) Assayer's Initials (if F.M. whether inverted); (4) Title of monarch, IV or IIII for Charles IV; (5) Bust, Charles III or IV, or if Ferd. VII, whether Lima, Santiago or laureated; (6) Condition.

Central Perforation. (7) Diameter; (8) Position, centred or not; (9) Width of countermark ring.

New South Wales 1813 *Stamping.* (10) On *obv.* or *rev.* of original coin; (11) Clock position of N in NEW when original coin is placed upright; (12) Long O in SOUTH slightly above S and U; (13) round O in SOUTH; (14) top left serif of first limb of W in WALES missing; (15) top right serif of last limb of W in WALES missing; (16) top left serif of last limb of U in SOUTH missing; (17) top right serif of last limb of U in SOUTH missing; (18) N of NEW and S of SOUTH equidistant to H of SOUTH and W of WALES; (19) N of NEW and S of SOUTH greater distance apart than H of SOUTH and W of WALES.

Five Shillings and spray Stamping. (20) Clock position of F of FIVE; (21) Dagger, fleur-de-lis or cross (?) dividing FIVE and SHILLINGS; (22) Bottom left serif of first limb of H of SHILLINGS missing; (23) LL of SHILLINGS lower than SHI; (24) Distance between nearest point of F of FIVE and tip of leaf; (25) Distance between nearest point of S of SHILLINGS to tip of leaf; (26) Placement of leaves.

Genuineness. (27) Are you satisfied that the original coin is genuine ; (28) Are you satisfied that the counterstamping is genuine ?

Location, Ownership, Pedigree. (29) Date of acquisition ; (30) Names of previous owners ; (31) If secured at public auction, name of Sale ; (32) Any other information regarding ownership.

(NOTE :—The enquirer is not interested in prices paid for specimens or valuations. In any listing the names of present owners will be withheld if such a wish is expressed—in such a case the location will be indicated thus :—" At present in a private collection in ." ; (33) Particulars of any passing through your hands.

Authorities. (34) Any authorities which could be consulted *other* than :—Andrews, Gill, Hyman, Stainsfield, Atkins, Boyne, Brit. Num. Jour., Num. Chron., Num. Cir., The Numismatist, Wayte Raymond, Coin and Medal Bulletin, Phillips, Everyman's Library, Cats. of collections—a nobleman, Browne, Bergsoe, Fonrobert, Dangar, Leonardos, Paget, Royal Mint, S. Aust. Nat. Collection, Reports of Australian Numismatic Societies.

General. (35) Cut Holey Dollars fullest of particulars ; (36) Models of Holey Dollars.

Please indicate Question Nos. which cannot be answered owing to the condition of the coin or counterstamping. Your earnest co-operation is solicited in this initial attempt to list and classify all known specimens of these pieces.

Information upon any unpublished and unusual Australian item will be welcomed by the Editor of *The South Australian Numismatic Journal*, c/o. J. HUNT DEACON. If publication of information is permissible, please indicate this. The *South Australian Numismatic Journal* is the Official Organ of The Numismatic Society of South Australia, and is distributed gratis to members of that Society. Hon.-Sec., address : c/o National Gallery, North Terrace Adelaide, S.A.

READERS' QUESTIONS ANSWERED.

Q. 1. What are the three shields below the portrait of Cecil Rhodes on the new S. Rhodesia crown ?

A. 1. These shields bear the arms of the three territories that Rhodes opened up to civilization in Central Africa—Southern Rhodesia, Northern Rhodesia and Nyasaland.

Q. 2. Can you tell me if a James I unite with orb and sceptre, *mm.* thistle, and reading MAG · BRIT · FRAN · & · HIB · REX was struck for English currency, and was it called a *Unite* or *Sovereign* ?

A. 2. This piece will be a Scottish unite worth £12 *Scottish* or 20/– *English*. The English unite of James' second coinage has the inscription ET · HIB (or HI) and the king wears the English and not Scottish crown The English *sovereign* of the first coinage has the inscription ANG · SCO, etc.

Q. 3. On p. 280 of your July Bulletin appears the statement " There were now seven coinages that had the uncrowned head of the Queen, our own, and those of six other nations of the Commonwealth. There were also thirteen coinages of the United Kingdom Dependencies which all had a crowned head." Would you let me know the names of the six other nations of the Commonwealth and of the thirteen Dependencies ?

A. 3. The following Commonwealth countries have an uncrowned head on their coins :—Great Britain, Canada, South Africa, Australia, New Zealand, Southern Rhodesia and Ceylon. The territories which have a crowned head are British Guiana, British Honduras, British West Africa, Cyprus, East Africa, Fiji, Hong-Kong, Jamaica, Jersey, Malaya, Mauritius, Seychelles and Newfoundland. As Newfoundland has recently joined the Dominion of Canada it is presumed that Canadian coins will be used there in future.

N.B.—Most of these territories are unlikely to have new coins this year.

PUBLICATIONS RECEIVED.

REIFFENBERG, A. **Ancient Hebrew Seals.** London, 1950. 58 pages + 1 plate. Price 12/6.

The author known to coin-collectors through his book on ancient Jewish coins—collected 52 specimens of seals from Palestine and from neighbouring countries, presenting them all illustrated and explained in the introduction and in notes below every picture.

The booklet is a nice addition to the literature on ancient sphragistics and will be welcomed by all interested in Jewish antiquities.

COLE, LIEUT.-COL. H. N. **Coronation and Commemoration Medals, 1887-1953.** (We can supply : *paper* 5/–, *cloth* 7/6. *Postage extra*).

This monograph is excellent value for the money. Lieut.-Col. Cole gives almost every item of information about Jubilee, Coronation, Durbar and cognate issues from Queen Victoria's Golden Jubilee in 1887. All the ribbons are illustrated in colour, and black and white pictures include one of the diamond-shaped medals given to mayors and provosts in 1897 as well as many other pieces and also admirable photographs of processions and ceremonies. The numbers issued and names of designers and manufacturers are stated where known, and the whole is put into a most readable narrative. In the circumstances there is little to criticise. Sir Bertram MacKennal's name is twice wrongly spelt, and some mention of the alleged bronze strikings of the Delhi Durbar medals might have been made, as they figure in official lists.

LETTERS TO THE EDITOR, FROM THE PRESS, ETC.

Electronic Sorting Machine. The Mint is pushing relentlessly on with the business of calling in silver coin and replacing it with cupro-nickel. A machine for separating silver from cupro-nickel coins is now in use. There is a touch of magic about it, for silver and cupro-nickel coins are of the same size and weight, so that they will operate equally well in slot machines. But it was not beyond the imagination of electronic engineers to devise a machine to distinguish between the two metals. The Mint will now buy up from the banks large quantities of mixed silver coins (£6m. worth this year) for electronic sorting.

Silver coins of the pre-1920 issues, which are of such fine silver that they are worth more than their face value, are already becoming collectors' pieces. Most have been withdrawn. The coins minted after 1920 were only 50 per cent. silver, and there is still more than £100m. worth of them in circulation.—*Birmingham Gazette, 11th, July.*

"Sovereigns" in Italy Illegal. The Government is concerned over the counterfeiting of gold sovereigns on the Continent. As reported yesterday in THE DAILY TELEGRAPH, a Milan court, after ruling that imitation coins are legal, handed back equipment and gold seized when five men were arrested.

A Treasury official said yesterday: "We take a serious view of the counterfeiting. Any such action is illegal. Recent decisions in Continental courts are now the subject of active consideration, but it is not permissible to indicate what steps may be taken."

In the cases in Italy and others in Switzerland it was claimed in defence that the counterfeits were of the same gold value as real sovereigns. The imitation has a ready sale at more than the £2 18s paid in Britain. The sovereign, with its 11-12ths gold content, is in much demand on the Continent. Gangs find many customers in the Middle East and Italy.—*Daily Telegraph, 28th July.*

Plea for Gold Coins. The Chancellor has decided that no gold coins can be included in the specimens sets to celebrate the Coronation. His reason is that providing the gold would place a strain on our foreign exchanges.

This decision is regrettable and the reasoning is difficult to follow. A sovereign and a half-sovereign could be included in 10,000 sets at a cost of about £45,000. The demand on our foreign exchange would be less than this figure, as many sets would be exported. What is £45,000 when compared with the millions spent on the import of films and tobacco? Many of the films are forgotten, all the tobacco goes up in smoke, but the coins of gold would endure. Five hundred years hence they would still be found in collections and museums all the world over.

Gold coins have been struck here in every reign since that of Edward III, and it is sad that Mr. Butler should break this proud sequence. But there is still time for him to change his mind.—*R. J. Martin, Sunday Times, 9th August.*

In his admirable letter drawing attention to the Chancellor's regrettable decision not to include gold coins in the Coronation specimen sets, Mr. R. J. Martin could also have mentioned the effect this will have abroad.

Recently in Italy and Switzerland the courts have ruled that sovereigns need no longer be regarded as legal tender. Surely a token issue of 10,000 sets of sovereigns and half-sovereigns would do much to dispel this notion.—*J. L. C. Taylor, Sunday Times, 16th August.*

Cocoa Cafe Token. Playing in the garden at her home at Weir Bank, Stapenhill, over the week-end the small daughter of a reader found a coin which she at first thought was a halfpenny, but closer examination revealed it to be a metal token. The reverse side bears the words, "Good for one pennyworth of refreshments at the" and the message is completed on the other side with the superscription "Burton-on-Trent Cocoa Cafe Company, Limited." I have seen many of these tokens before and I believe they were commonplace around the beginning of the century, though where the Cocoa Cafe was, I am afraid I have not the slightest idea, as it was before my time.—*Burton Daily Mail, 20th July.*

A "Faithless" Florin ? The United Protestants' Association of Australia has protested to the Federal Government against the omission from Queen Elizabeth florins of the letters F.D. (Defender of the Faith). Treasury officials said the letters were omitted for simplicity, and the inscription would not be altered. The new florin bears the inscription : "Elizabeth II Dei gratia regina" (Elizabeth II by the grace of God, Queen).—*Express & Echo, 18th July.*

WAR MEDAL NOTES AND NEWS.

Edited for us by a war-medal collector.

Elizabeth I and Foreign Orders. We take the following from De Wicquefort's *The Embassador and his Functions* (1716) :—" Henry IV had given the Order of St. Michael to Nicolas Clifford and to Anthony Shirley, on the account of the services they had done him in the War. These two Gentlemen being return'd to England, the Queen sent them to Prison, and commanded them to send back the Order, and to cause their Names to be raz'd out of the Registers. She said, That as a virtuous Woman ought to look on none but her Husband, so a subject ought not to cast his Eyes on any other Sovereign than him God had set over him. I will not, said she, have my Sheep mark'd with a strange Brand, nor suffer them to follow the Pipe of a strange Shepherd." Broadly speaking the principle enunciated in the last sentence held good until the end of Queen Victoria's reign, and it was her successor who introduced a more liberal practice in the acceptance of foreign awards by Britons.

READERS' PROBLEMS.

36. *A reply.* The various medals of the First Afghan War were given for particular actions or campaigns, and none was a general medal for the war. For example, it was not given to the officers of the 27th Bengal N.I., such as the officer commanding the regiment Col. Thomas Palmer, Capt. J. J. Poett (who was seriously wounded), or Lieut. John Nicholson (afterwards Brigadier). It is therefore extremely unlikely that the Cabul medal, 1842, was awarded to any of the officers and men of the 44th Foot, as these took no part in the successful campaign.

38. *A reply.* On 21st April, 1953, two Afghanistan medals, one with bar KANDAHAR and one without a bar, both to E/B.R.A., were sold at auction, and I bought one of them. There should be a fair number on the market, but you will probably have to wait to find them.—*G. R. B.*

41. I have two Naval G.S. medals, each with bar PALESTINE 1945-48. One has INDIAE IMP. in the legend on the obverse, the other has not. Does this mean that the medal without these words is scarce ?—*G. H.* (*We had several comments on the change of legend in these pages last year. Time alone will show which version of this and other medals which were current when the Royal Style and Title was changed, is the best*).

42. I have a Naval G.S. Medal (the 20th century one) in which the bar PALESTINE 1945-48 has been fixed so that the inscription on its faces the reverse of the medal. Is this an error on the part of the Royal Mint ? (*If the medal was made up like this at the Mint, and not elsewhere (e.g. by the fixed suspender bar having become detached and being re-fixed by private enterprise), it is undoubtedly an error, and incidentally one which we have not met with before*).

43. Where can I consult a roll of the participants in the Charge of the Light Brigade at Balaclava ?

A SMALL MEDAL DISPLAY.

By Capt. Jas. H. McCall, D.C.M.

A Medal Display, like a cake, depends on the ingredients, and, like a cake, on how they are " mixed" !

A well arranged display can attract large numbers of sightseers, whereas anything too academic and " high hat " will only draw the experts, and, in a small town, these latter just do not exist.

The writer, not being in a position to buy the more expensive items, was fortunate in his friends, and from them was able to borrow almost every known modern medal including two Victoria Crosses and a George Cross and many more which he did not have in his own collection.

The aim was to show some 460 medals and, for the purpose, a large museum display case was borrowed. The ordinary fitments being of no use for the purpose, it was decided to make a special frame to slide inside the glass case. (See sketch). This frame was made of soft fibre-board and covered with baize. The reason for making the frame of soft fibre-board was to allow for easy pinning of medals.

In a district such as the writer's where the military spirit is strong, and there is only *one* regiment which matters, the obvious thing to do is to make a special display of decorations

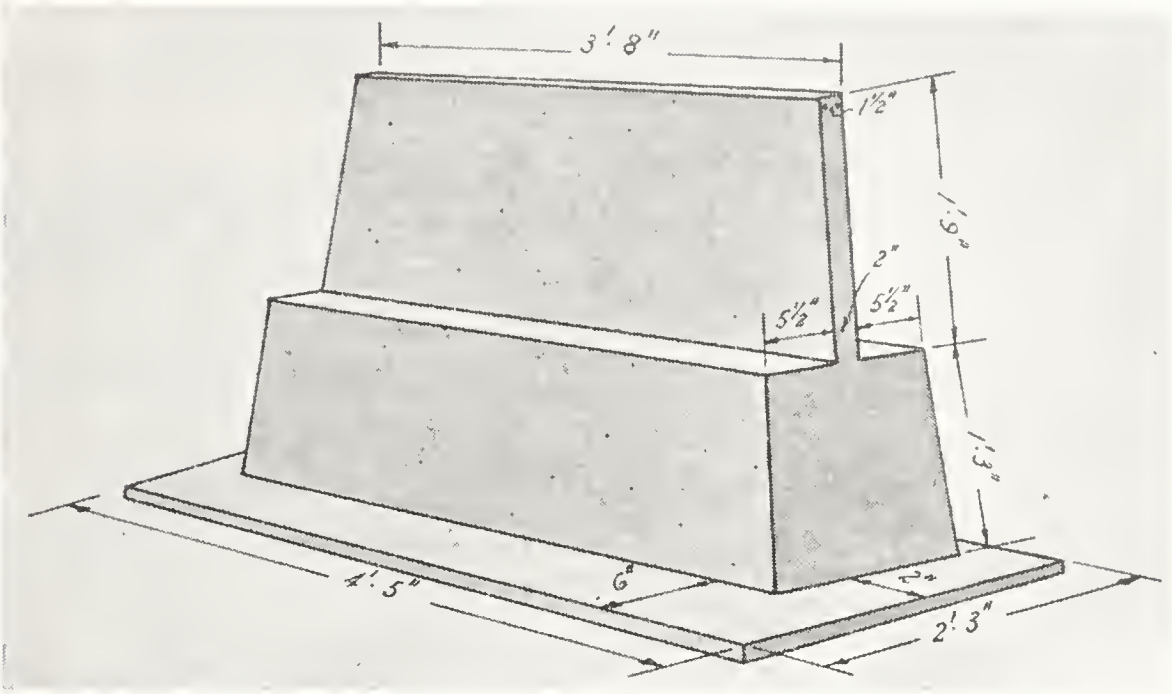

and medals earned by the local regiment. For this purpose the upper half of one side was used wholly for this regiment. The V.C. and G.C. were used as centre pieces and the others were grouped around. The " escort " to the two Crosses were four groups of medals, each commencing with an honour,—above, a group of seven which included a D.C.M., M.M. and bar, a " Mention " and a French Croix-de-Guerre. To the right was a group with a M.C., the only one awarded to a Warrant Officer for the local T.A. battalion, and a similar group on the left which included a M.C. to the Medical Officer (a local doctor) and beneath, a group of 10 led by a M.B.E. to a Q.M. who gave 39 years' service to the same battalion, and who is well known in the district.

Other groups included those of the C.O. who took the battalion to Gallipoli in 1915 and those of the C.O. (a D.S.O.) who brought them off. Another group, of seven, was led by the first-ever honour (a D.C.M.) to be awarded the battalion. Various groups, each of which contained at least one British or foreign honour, some of them rare, were arranged around. To complete the panel were various small groups and individual medals which covered every campaign the regiment had taken part in from Egypt, 1801, (M.G.S., bar Egypt) to Korea, for which the two ribbons were shown.

The second panel of this side was given over to groups from all branches of the Services and civilians, such as Police, Fire Service, Royal Humane Society.

The second side consisted for the most part of individual medals. Again as a centre piece was another V.C. with a close " escort " of D.C.M., D.S.M., G.M., M.M. Geo. V, and M.M. and bar Geo. VI. The remainder of this panel was given over to campaign medals from Seringapatam 1799 to Palestine 1945-48, all arranged in correct order.

The lower panel of this side consisted mainly of groups of Long Service Medals of the various Services and of some special family groups and campaign groups, such as the 26 bars to the Q.S.A. Medal, etc. Also on this side were individual medals, pairs and groups awarded to local people and many of them loaned by relatives and friends.

Each end of the frame held some 25 medals and these were given over entirely to the " foreigners."

The narrow ledges surrounding the frame were used for medallions, plaques and various medals which visitors offered to lend for the period of the display. Under this heading the Peace of Breda silver medal, 1667, and the bronze Lusitania medal were the cause of many and varied questions and answers !

It is essential that *every* medal should be named in sufficiently large print to enable visitors to read it through the glass case. Otherwise many people would go away disappointed, as when a crowd starts milling around it is impossible for the exhibitor to attend to all. He should stand by and answer questions as he sees people in difficulties, or try to settle the innumerable arguments among the " old soldiers." It is a treat to listen to the latter as they fight their battles over again at the sight of a medal or of a particular bar to a medal. They may not know a great deal about medals, but they know all about how to earn them !

It is desirable to provide a Visitors' Book, and if possible, to have an attractive and persuasive young lady in attendance ! In one show which the writer ran for a charity, and which was open on six afternoons, some 2000 people signed their names and addresses, while more than as many again were unable to get near the book to sign. This was in a town of some 27,000 inhabitants.

There is a considerable amount of work involved in the preparation and it will be found that it takes from two to three weeks to get all in readiness, working in the evenings. This however, is well worth while, as one seldom sees so much interest taken in anything else. Then, too, it means a free and extremely good advertisement, and possibly several gifts of medals which would otherwise have only been thrown out. There are also the people who never knew that they could cash in on their medals !

One would, of course, insist on the whole being covered by insurance at the expense of the party for whom the show is being given. Then, in spite of the case being securely locked, it must never be left unattended as it would be an easy matter to break the glass and remove anything quickly.

If the show lasts more than one day it will be necessary to have the case removed to some place of safety such as a bank, police office or Council strong-room each night.

Should anyone seriously think of putting on a medal show, the writer will be only too pleased to assist with advice or the loan, strictly on condition that they are returned promptly, of several photographs of the exhibition. In any case, *hang* all the medals possible rather than laying them on the flat. They should be shown as worn.

The writer is proud of the fact that his first effort was considered so worth-while as to warrant the attendance of the Royal Colonel-in-Chief of his regiment, the regiment which had been specially featured, also of the fact that the Royal signature is in the Visitors' Book!

NUMISMATIC SOCIETIES.

Kent N.S. At a meeting held at the Maidstone Museum, Mr. C. P. Burnham spoke on "The Coinage of Edward III," which he illustrated with coins from his collection, and photostat copies of documents relating to his subject. A special exhibition of paper money was made, which included an Egyptian note with the actual signature of General Gordon, a rare paper hop-token of John Pinyon, with a wax seal, and German, Malayan and Greek notes. Also shown were pennies, halfpennies and farthings of Edward III, and various shells used as currency.

Lincolnshire N.S. The August meeting of the Society was held on Friday 7th at the Lincoln Museum. The Curator, Mr. Baker, gave a most informative talk on the innumerable antiques, including coins and medals, that are housed in the museum and the history of the building itself.

The meeting ended with L. H. Manning, the vice-president, thanking Mr. Baker on behalf of the members for his kindness and co-operation in making the meeting such an enjoyable success.

London N.C. There was a satisfactory attendance at the monthly meeting on the 2nd July, with the President, Mr. L. V. W. Wright, in the chair. Members were invited to give impromptu talks on, and exhibitions of, the favourite items in their collections and an interesting evening resulted. The following items were exhibited and commented on :—

Palestine Campaign Medal with bar 1945-48 awarded to member R. J. Betts ; Copper medal of Cardinal Charles of Bourbon and silver ecu of Henry V of France, by Major-General A. J. K. Pigott, C.B., C.B.E. ; Three half-crowns of Edward VI of different types chosen as examples of rarity of type as distinct from rarity of date, a first issue 6d and third issue 1/- of the hammered series of Charles II, chosen for beauty of design, and a Charles II copper half-penny and William III half-crown, both chosen for the excellence of their condition, all exhibited by Mr. J. M. Ashby ; whilst our worthy Secretary, Mr. J. Weibel, in order to show that not only coins are beautiful, but also postage stamps, produced examples of both from his native Switzerland. He also displayed many other fine pieces gathered in the course of his European travels as well as an example of the Southern Rhodesian proof crown 1953 and a Kruger crown showing the double shaft. A gold Santiago 8 scudos of Charles IV, 1793, provoked some discussion, which was unresolved, as to whether this, rather than the silver eight reales, was the classic "piece of eight."

Southampton and District N.S. The June meeting of the S.D.N.S. was devoted to Mr. H. J. Good's paper, "Numismatic Literature available to the Coin Collector, Pt. 2," during which he showed the balance of the books from his library obtainable at popular prices.

The annual exhibition of members' coins is one of the highlights of every society's year, and the S.D.N.S.'s first meeting of this kind proved a great success. Even the youngest members gave a short talk on their most interesting pieces. V. H. J. Jones told of the

day when he was passed a silver denarius of Antoninus Pius amongst his change; while much interest was shown in A. T. Baring's crown of Elizabeth I in exceptionally fine condition.

Wessex N.S. At the June meeting Commander R. P. Mack, R.N., gave a delightful and authoritative appreciation of Ancient British Coinage, with particular emphasis on the coinage found in the Wessex area. Following as it did the recent publication of Commander Mack's welcome book on this subject, the talk was closely followed by the well-attended meeting and at the close, the speaker dealt with many questions relating to this coinage. This meeting must undoubtedly rank as one of the high-lights of the present season and Commander Mack, who is a member of the Society, was warmly thanked at the close of his paper.

In July, members gave their annual exhibition of coins from their collections which they considered to be of particular interest. As usual, this meeting produced many exceptionally fine specimens and also many rare and unusual pieces. It is a feature of the Society's year to which all look forward with expectation and this year was no exception.

South African N.S. The July number of this Society's Newsletter has now arrived and contains two interesting articles, one, entitled, " A Further Note on Sir Harry Smith's Medal for Gallantry " and the other being an appreciation and criticism by Mr. J. M. Day of the new British and Dominion coinages. The writer of this last paper expresses the view of a great many people when he says of the Queen's portrait on the British coins, " I am in two minds about this new portrait. In the main I like it, for it is a young portrait giving a slim effect. Some have said its slim effect makes the neck appear too long, but it is a suitable portrait for a young and charming Queen. My real criticism is the lack of relief in the profile of the face and the poorly cut detail of the eye, eyebrow and hair."

ABBREVIATIONS

N = gold	*R* = silver	Æ = copper or bronze
O. or *obv.* = obverse	R or *rev.* = reverse	*Mm.* = mintmark
r. = right	l. = left	diad. = diademed.
laur. = laureate	rad. = radiate	dr. = draped.
R = rare	*RR* = very rare	*RRR* = extremely rare

CONDITIONS OF A COIN

(i.e., grade of preservation) in order of merit.

Proof = Specially struck coin with a mirror-like or matt surface.
FDC = Perfect mint state.
Unc. = Uncirculated.
Almost FDC.
Good EF.
EF = Really beautiful, but not absolutely perfect.
Almost EF.
Nearly EF.
Good VF.
VF = Slight wear or damage.
Almost VF.
Nearly VF.
Good F.
F = Worn but still distinct.
Almost F.
Nearly F.
Fair = Very considerably worn or damaged.

M = Mediocre; not a good piece.
P = Poor.

Where two conditions are given with a line between them (such as EF/VF) the first applies to the *obverse* and the second to the *reverse*.

BOOKS OF REFERENCE most often used

B.M.C.=*British Museum Catalogues*; *B.*=Babelon, *Monnaies consulaires*; *R.*=Rolland, *République Romaine*; *C.*=Cohen, *Monnaies impériales*, 2nd Edn.; *M.* or *M. & S.*=Mattingly and Sydenham, *Roman Imperial Coinage*; *G.*=Goodacre, *Byzantine Coins*; *Ev.*=Evans, *Ancient British Coins*; *S.*=Seaby's *Stand. Cat. of Coins of Gt. Brit.*; *B.*=Brooke, *English Coins*; *K.*=Kenyon, *Gold Coins of England*; *H.* or *Hks.*=Hawkins, *Silver Coins of England*; *E.S.C.*=Seaby, *English Silver Coinage* 1649-1949; *M.*=Montagu, *Copper Coinage of England*; *Br.*=Bramah, *English Regal Copper Coins*; *B.*=Burns, *Coinage of Scotland*; *N.*=*Nelson*, various works; *A.*=Atkins, *British Colonial Coins*; *M.I.*=*Medallic History of England*; *S.R.*=Schulthers-Rechberg, *Talercabinet*; *Rm.*=Reimann, Sale Catalogue; *W.R.*=Wayte Raymond, *Coins of the World, etc.*; *W.*=Williamson, *Tokens of the Seventeenth Century*; *D.H.*=Dalton & Hamer=*Token Coinage of the Eighteenth Century*; *D.*=Davis, *Nineteenth Century Token Coinage*; *I.M.C.*=*Indian Museum Catalogue.*

LIST No. 425. OCTOBER, 1953

SEABY'S COIN & MEDAL LIST

A PRICE LIST OF ARTICLES Offered for Sale by

B. A. SEABY, Ltd., 65 Gt. Portland St., London, W.1

APPROVAL.—All coins and medals are sent out on approval and may be returned within 7 days of arrival if not entirely satisfactory. Collectors unknown to us should send a cash deposit covering their order or give suitable trade references.

Postage charges. According to weight on books, medals and heavy lots, otherwise :—
Inland orders under 10/–=3d ; 10/– to £2=10d
Overseas orders under 5/–=4d ; 5/– to £2=1/–
} Over £2 no charge.

N.B.—When ordering coins from this list please state numbers, brief description and price.

As in most cases we have only one example of each number for sale and this may be sold when your order is received, please send alternative numbers or instruct us if we may send another piece somewhat like it if possible.

GOLD COINS.

ANCIENT.

G1341 **ROMAN, Mark Antony,** *aureus*, with portrait, struck at Rome, *circa* B.C. 39. M . ANTONIVS [III VI] R . R . P . C, his bare head r. R. L . REGVLVS III VIR . A . P . F, clockwise from 1 o'clock, Anteon (or Roma) seated facing on seven hills, holding spear and parazonium, resting on oval shield. *C.* 25 *fair, with chisel cut or spade mark on obv., RRRR, of great interest* £47/10/–

G1342 **Tiberius,** *aureus*. His laur. hd. r. R. PONTIF MAXIM, Livia seated l. *Always of interest as the coin that was in circulation during the Ministry of Our Lord* F £14

G1343 **BYZANTINE, Arcadius,** 395-408, *solidus* of *Milan*. Similar. R. VICTORIA AVGGG, emperor standing r., foot on captive, MD in field. *G.* 19
nearly EF, *slightly bent* £7/10/–

G1344 **John II,** 1118-1143, *nomisma*. Half-length busts of emperor and Virgin facing. *G.* 7 F, *large cracked* 70/–

ENGLISH—BRITISH.

G1345 **Henry VIII,** second coinage, *crown*. Crowned h K (Henry and Katharine of Aragon) in field on obverse VF £8/10/–

G1346 Coinage of 1546-47, **sovereign of Bristol** ; *mm.* WS monogram (*Obv.*), hENRICVS : DI'. GRA'. AGL'. FRANC'. · Z : HIBER'.: REX : ' slipped trefoil stops, mixed lettering, mostly Lombardic, both sides. Crowned figure of the king with his characteristic old head, seated on throne, holding orb and sceptre, rose at his feet. R. IHS' : AVTEM : TRANSIENS : PER MEDIVM : ILLORV' . IBAT, crowned shield with lion and dragon supporters, HR monogram on tablet below. *S.* 1015 (£160). *Reduced from* £155
VF, *toned, RRRR* £135

G1347 **Elizabeth I,** *pound sovereign, mm.* woolpack (1594-6). Her crowned bust l. wearing ruff and richly jewelled dress, pellet stops. R. Crowned shield between ER, annulet stops *about* EF/*good* VF, *R* £45

G1348 *Angel, mm.* tun (1592-5). St. Michael and dragon *good* VF, *scarce thus* £17/10/–

G1349 **James I,** second coinage, *angel* ; *mm.* rose. Similar *good* VF/VF, *RR* £57/10/–

G1350 *Third coinage, quarter-laurel* ; *mm.* rose .. .. .. *good* F 50/–

G1351 **Cromwell,** *broad*, 1656. OLIVAR . D . G . RP . ANG . SCO . ET . HIB . &C PRO ., his laur. hd. l. R. PAX . QVÆRITVR BELLO, 1656, crowned shield
practically FDC *and a beautiful red tone* £60

G1352 **Charles II,** *five-guineas*, 1674, first bust with pointed truncation and lovelock. *Only one of this date noted at auction between* 1925 and 1939. *A very pleasing piece*
nicely toned, EF, *RR* £80

G1353 **William and Mary,** *guinea*, 1694. This conjoined busts r.
really good F £9

G1354 **Anne,** *two guineas*, 1709
nearly VF/VF, *R* £20

G1355 **George I,** *two-guineas*, 1720. (*Reduced from* £37/10/–)
EF, *but cleaned* £32/10/–

G1356 **George II,** *two-guineas*, 1738, young head *nearly* VF £12/15/– ; VF £14

G1357 *Two-guineas*, 1740, intermediate head EF *but for faint scratches below head* £14

G1358 *Half-guinea*, 1734, young head M, *R* 55/-

N.B.—For George III guineas, see list below.

G1359 **George III,** *half-guineas*, seventh head, 1808 .. .. *good* F 42/-

G1360 *Third-guinea*, 1810, under glass is a gold mount with ring for suspension EF 52/6

G1361 *Quarter-guinea*, 1762 *fair*/F, *bent* 35/-

G1362 *Sovereign*, 1820 .. *good* F 95/-

G1363 *Half-sovereign*, 1818 .. F 42/-

GEORGE III GUINEAS.

			Poor	*Fair*	*Fine*	*Very fine*	*Extr. fine*
GG57	1763, *RRR*	2nd bust ..	95/-				
GG58	1764, *RRR*	,, ..				£14	
GG59	1765, *RR*	3rd bust ..		£5/5/-		£9	
GG60	1769, *RRR*	,, ..			£5/10/-		
GG61	1772, *Sc.*	,, ..				£6	£8
GG62	1774	4th bust ..		85/-			
GG63	1775	,, ..		85/-			
GG64	1776	,, ..			85/-		
GG65	1779, *R*	,, ..			87/6		
GG66	1781, *R*	,, ..	77/6		92/6		
GG67	1782, *Sc.*	,, ..			95/-	£5/15/-	
GG68	1783, *RR*	,, ..		92/6			£9
GG69	1784, *Sc.*	,, ..		87/6	97/6		
GG70	1785	,, ..			85/-	95/-	
GG71	1786	,, ..					£6/10/-
GG72	1787	5th bust ..			90/-	£5/10/-	£7/10/-
GG73	1788	,, ..	77/6	87/6	97/6	£5/15/-	
GG74	1789, *Sc.*	,, ..				£5/12/6	£6/12/6
GG75	1790	,, ..		82/6	92/6	£5/5/-	
GG76	1791	,, ..	77/6		90/-	£5/5/-	£6/10/-
GG77	1793	,, ..			85/-	95/-	£6
GG78	1794	,, ..		87/6	92/6		£6
GG79	1795, *Sc.*	,, ..			92/6	£5/10/-	£6/17/6
GG80	1797, *RRR*	,, ..					£11/10/-
GG81	1798	,, ..					£6
GG82	1813, *R*	6th bust ..				£10	

We have more than one example of many of these.

G1364 **George IV,** *two pounds*, 1823. Bare head l. R. St. George EF £15; *almost* FDC £16/10/-

G1365 *Sovereign*, 1822 *about* VF 97/6

G1366 *Half-sovereign*, 1825 .. VF 65/-

G1367 **William IV,** *sovereign*, 1832 EF £7/15/-

G1368 — — 1837 .. EF £7/15/-

G1369 **Victoria,** young head, *sovereign*, shield reverse, 1847 .. .. EF, *R* £8/15/-

G1370 — — 1857 .. VF £5/15/-

G1371 — — 1861 .. VF £5/10/-

G1372 — — 1863 .. VF £5/10/-

G1373 — — 1864, die 82 *nearly* VF £5/5/-

G1374 — — 1866, die 20 *good* VF £5/15/-

G1375 — — 1869, die 57 VF £5/10/-

G1376 — — 1871, die 66 VF £5/5/-

G1377 — — 1872, die 18 VF £5/10/-

G1378 — — 1872, die 28 *about* EF £6/10/-

G1379 — — 1881M .. VF £5

G1380 — St. George *rev.*, 1887M VF £5/5/-

G1381 *Half-sovereign*, 1849 *good* F, *R* 52/6

G1382 — 1855 .. .. .. VF 60/-

G1383 — 1867, die 21 .. EF 80/-

G1384 — 1877, die 134 .. EF 75/-

G1385 — 1883 .. .. *good* VF 62/6

G1386 — 1885 .. .. *good* VF 60/-

G1387 Jubilee head, *five pounds*, 1887 *good* EF £31

G1388 Two pounds, 1887 *good* EF £13/10/-

G1389 Set, 1887; *N* £5, £2, £1 and 10/-; *R* 5/-, 4/-, 2/6, 2/-, 1/-, 6d, and 3d *good* EF £57/10/-

G1390 *Sovereign*, 1889 EF, *scarce* £6/15/-

G1391 — 1892 .. .. EF £6

G1392 — 1892S .. .. *good* VF £5

G1393 Old head, *sovereign* :—(a) 1893, EF £6 15 – ; (b) 1895M, EF £6 ; (c) 1896M, EF £5 5 – ; (d) 1899M, VF 90/– ; (e) 1900, *good* EF £6 ; (f) 1901M, EF £5/15/–

G1394 **George V,** *five pounds*, 1911 *brilliant proof*, FDC £40

G1395 **George VI,** *five pounds*, 1937 *brilliant proof*, FDC £37/10/–

G1396 *Sovereign*, 1937, *proof* EF £8/10/–

EUROPE.

G1397 **AUSTRIA,** Republic, 25 *schilling*, 1926. Eagle. R. Value. (*Reduced from £5*) *good* EF 80/–

G1398 **Salzburg.** Gandolf, *quarter-ducat*, 1662. Arms. R. St. Rudbert seated facing *nearly* VF 37/6

G1399 **FRANCE,** Louis XVI, *double-louis*, 1786A. Hd. l. R. Double-shield, square-topped, crowned *nearly* EF £11/10/–

G1400 Napoleon, 20 *francs*, 1813A. Laur. hd. l. R. Value .. .. .. VF 95/–

G1401 Louis XVIII, first restoration, *piece de* 20 *francs*, 1815A. Struck just before the Waterloo campaign .. .. VF 92/6

G1402 Louis-Napoleon Bonaparte, 20 *francs*, 1852. Bare hd. r. R. Value VF 97/6

G1403 Napoleon III, 10 *francs*, 1866A. Laur. hd. r. .. .. .. F/VF 42/–

G1404 — 5 *francs*, 1863BB. Similar VF 27/6

G1405 Third Republic, 20 *francs*, 1898. Victory writing. R. Value in wreath EF 90/–

G1406 **GERMANY,** Wilhelm I, 10 *mark*, 1873B. Hd. r. .. .. VF 57/6

G1407 Wilhelm II (" The Kaiser "), 20 *mark*, 1911. Hd. r. R. Eagle EF £5/5/–

G1408 **Bavaria,** Maximilian II Emanuel, *max d'or*, 1720. Bust r. R. Virgin and Child, shield below .. *about* VF £6

G1409 **East Frisia,** Edzard, *florin*, 1572. Half-length bust of the emperor Maximilian II r., dividing date. R. Shield with crest above .. .. .. *nearly* VF £5

G1410 **Prussia,** Friedrich Wilhelm I, *ducat*, 1733, *Berlin*. His bust r., cuir. R. Crowned star of the Order of the Black Eagle, *EGN* EF £6/10/–

G1411 **Germany** (?), family medal (?), weight 119 grains ; 17th or 18th century. MAGNA NIMIS . INGENITA . PIETAS, the family crest, heraldic tiger l. on wreath. R. NOBILITAS . SOLA . ET . VNICA . VIRTVS, shield with six quarterings FDC £10/10/–

G1412 **GREECE,** George, 20 *drachmai*, 1884. Hd. r. .. .. .. EF £5/10/–

G1413 **ITALY, Papal States,** Benedict XIV, *zecchino*, 1744. " The Church " on clouds. R. The Pope's arms .. .. VF 75/–

G1414 **Rome,** Senate of, 1350-1439, *ducato*. S . PETRVS / SEN / ATOR VRBIS, Senator kneels before St. Peter, rosette and P below. *C.N.I.* 6603 .. .. VF, *R* £7/10/–

G1415 **Vatican City,** Pius XII, set for the Holy Year, 1950, mounted on card :— Æ 100 *lire*. Pope l. wearing tiara. R. Pope knocking at the Holy Door ; ÆR 10 ; ni. 5, 2 and 1 *lire*, *different scenes*. *Fastened in official holder that shows both sides of the coins* FDC £7/10/–

G1416 **MALTA,** Martin Garzes, 1595-1601, *zecchino*. Usual type .. *nearly* VF £6

G1417 **NETHERLANDS,** Wilhelmina, 5 *gulden*, 1912. Bust r. .. .. VF 47/6

G1418 **RUSSIA,** Elizabeth, *half-rouble*, 1757. Bust r. R. Imperial eagle *good* VF/EF 57/6

G1419 **SPAIN,** Charles III, ½ *escudo*, 1762. Hd. r. .. .. .. F/VF 25/–

G1420 — — 1786. Bust r. F/VF 24/– ; *good* VF 30/–

G1421 Ferdinand VII, ½ *escudo*, 1817. Laur. hd. r. .. .. .. *nearly* VF 25/–

G1422 — 2 *escudo*, 1826. Similar EF £6

G1422A **YUGOSLAVIA,** Alexander I, 20 *dinars*, 1925. His hd. l. R. Value FDC £7/10/–

AMERICA.

G1423 **U.S.A.,** *five dollars*, 1912. Indian's head. R. Eagle l. Design sunken both sides .. .. VF 87/6

G1424 — 2½ *dollars*, 1871S. Hd. of Liberty l. .. .. *nearly* EF/VF 67/6

G1425 — *dollar*, 1852 .. *almost* EF 47/6

G1426 **MEXICO,** 50 *pesos*, 1945. Victory facing ; mountains in background. R. Eagle on cactus .. EF £30

G1427 **CHILE,** Ferdinand VII of Spain, *onça* or 8 *escudos* of *Santiago*, 1817 (FJ). Bust r. .. .. F/VF £17/10/–

G1428 **COLOMBIA,** Ferdinand VII, *onça* or 8 *escudos* of *Bogota* (NR—J.F.). Similar *good* VF £22/10/–

ASIA AND AFRICA.

G1429 **Abbasid Caliphs** (of Bagdad). Er-Rashid, 786-809 A.D. (of Arabian Nights fame), *dinar*, A.H. 176, no mint F 75/–

G1430 **Fatimids** (of Egypt). Ez-Zahir, 1020-35 A.D., ¼ *dinar*, A.H.—, mint— VF 25/–

G1431 **Crusaders** (of Syria and Palestine). Boemund of Antiochia under regency of Tankred of Tiberias and Galilaea 1111-1112 A.D., *dinar*. Imitation of that of El-Mustansir, the Fatimid Sultan of Egypt in pseudo-Cufic. *Obv.* 4-line legend and letter **B** above, all within circular legend. R. Similar but small cross in centre and letter **T** on top. *Schlumberger*, Pl. v, 24 *RRR*, F/*nearly* VF £18

G1432 **Great Kushans,** Huvishka, 150-180 A.D., *stater*. Upper part of king l., helmeted, emerging from clouds. R. Siva four armed l., holding vase, elephant's goad, thunderbolt and goat. *B.M.C.* xxviii, 14 VF £10/10/–

G1433 **Chandellas** (of Mahoba). Madana Varma, 1130-65 A.D., ¼ *dramma*. Goddess Parvati std., facing. R. Two line legend. *I.M.C.* 3 .. .. .. EF 45/–

G1434 **Mughal Emperors,** Muhammad Shah, 1719-48 A.D., *mohur*, year 21, Shahjahanabad .. .. .. EF £8

G1435 **Vijayanagar,** 2nd dynasty, 1505-65 A.D., *pagoda*. Rama and Sita throned r., Hanuman stg. in front. R. Two-line legend in Kanarese. *Elliott* iii, 108 *RR*, F/VF £8/10/–

G1436 **Mewar** (Udaipur), Swarup Singh, 1842-61 A.D., *mohur*, undated. *Webb* ii, 2 EF £7/10/–

G1437 **Nepal,** Rajendra, 1816-47 A.D., ¼ *mohur*, Saka 1764 .. .. EF 50/–

G1438 **E.I.C.** (Madras), 1809-1835 A.D., ¼ *mohur* (upright milling). *Atkins* 9 EF 57/6

G1439 **Japan,** Emp. Komei of Manyen period, *N* (base, 30 × 12), *one bu*, rectangular .. .. EF 25/–

G1440 **Turkey,** Abdul Aziz, 1861-76 A.D., 250 *piastres*, A.H. 1277, year 8, Constantinople .. .. *good* VF £10/10/–

G1441 **Egypt,** Ahmad I, 1603-17 A.D., *altun*, A.H. 1012, Misr *nearly* EF 70/–

G1442 Abdul Hamid II, 1876-1909 A.D., $^1/_{10}$ *sequin*, A.H. 1293, year 5 .. EF 13/6

G1443 **Z.A.R.,** Krueger, *pond*, 1898. Bust l. EF £6

GREEK COINS.

All are silver, unless otherwise stated. The number after metal indicates the diameter in millimetres.

AG501 **HISPANIA, Carthago Nova,** Tiberius, Nero and Drusus, Æ 26. Hd. of Tiberius l. R. Hds. of Nero and Drusus facing each other. *C.* 4 .. F 15/–

AG502 **Romula,** Tiberius, Drusus and Germanicus, Æ 25. Hd. of Tiberius l. R. Hds. of Nero and Germanicus facing each other. *C.* 2 .. .. *fair* 10/6

AG503 **GAUL, Auriol find,** 520-470 B.C., *obol*. Helmeted hd. of Pallas r. R. "Mill-sail" incuse .. .. .. F 27/6

AG504 — Undetermined hd. r. R. Similar F 25/–

AG505 **Rhone Valley,** *quinarius*. DVRNACOS. Hd. of Pallas r. R. AVSCRO. Horseman galloping r. *La Tour* 5762 F 15/–

AG506 — Laur. hd. l. R. Horse l. F 12/6

AG507 **Catalauni,** Potin 21. Warrior r., with spear and shield. R. Barbarous horse r. *Forrer* 7 .. .. .. F 10/6

AG508 **Sequani,** *quin.* TOGIR. Helmeted hd. l. R. TOG. Horse galloping l. *F.* 206 *good* F 25/–

AG509 **PANNONIA, Celts of the Danube,** *stater*. Copy of the *stater* of Philip II of Macedon. Laur. hd. of Zeus r. R. Horseman r.; triskelis beneath horse. *F.* 296 VF 63/–

AG510 — *stater*. Copy of the Larissa didrachm. Hd. of nymph facing. R. Horseman l. in round incuse. Barbarous. *F.* 319 *RR*, *good* F £7

AG511 **CAMPANIA, Hyria,** 400-335 B.C., *didrachm*. Helmeted hd. of Pallas; helmet adorned with owl. R. Bull r. *Sambon* 776 *nearly* VF £5/5/–

AG512 **CALABRIA, Tarentum,** 334-330 B.C., *didrachm*. Horseman galloping r., thrusting with spear downwards. R. Taras on dolphin l., holding distaff; eagle in front; waves beneath. *Evans* v, A.7 VF/F 63/–

AG513 — Similar. *Ev.* v, B.1 R *slightly off centre*, VF/F 55/–

AG514 — 302-281 B.C., *drachm*. Helmeted hd. of Pallas r.; helmet adorned with Scylla hurling rock. R. API. Owl r. and olive-branch. *B.M.C.* 313 .. VF 35/–

AG515 — 281-273 B.C., *drachm*. Similar to l., but helmet adorned with sea-monster. R. Owl r., wings opened. *B.M.C.* 317 *nearly* VF 35/–

AG516 **LUCANIA, Poseidonia,** 480-400 B.C., *sixth*. Poseidon r., striking with trident. R. Bull l. *Cf. B.M.C.* 59 *good* F 25/–

AG517 **BRUTTIUM, Bruttii,** 282-203 B.C., Æ 26. Hd. of Ares l. R. Bellona advancing r.; in front, lyre. *B.M.C.* 53 VF/*fair* 15/–

AG518 **Croton,** 420-390 B.C., *stater*. Hd. of Hera, nearly facing, inclined to r. R. Heracles reclining l. on rock covered with lion's skin; to l., tripod; above strung bow and club, below which MΔ. *B.M.C.* 90 *RR*, F/*good* F £14

AG519 **Rhegium,** 270-220 B.C., Æ 22. Hd. of Apollo l.; lyre behind. R. Tripod-lebes. *B.M.C.* 75 .. .. VF 15/–

AG520 — 203-89 B.C., Æ 16. Hds. of Dioscuri r. R. Young Asclepios standing l. *B.M.C.* 110 .. .. VF/F 12/6

AG521 **SICILY, Centuripae,** after 241 B.C., Æ *hemilitron.* Hd. of Apollo r. R. Lyre. *B.M.C.* 7 .. .. *nearly* F 15/-

AG522 **MACEDON, Thessalonica,** Nero, Æ 22. Hd. of Nero l. R. Inscription in wreath. *B.M.C.*— .. *R,* F 12/6

AG523 Maximus, Æ 28. Bust r. R. Nike l., carrying trophy. *Cf. B.M.C.* 118 *fair*/F 12/6

AG524 **Kings of,** Alexander III, 336-323 B.C., *tetradrachm.* Hd. of young Heracles in lion's skin. R. Zeus enthroned l., holding eagle and long sceptre. *Müller* 734 VF 85/-

AG525 — *drachm.* Similar. Various mints *nearly* VF 15/-

AG526 Philip III, 323-316 B.C., *tetradr.* Similar. Mint: Lycia. *Müller* 99 *nearly* VF/VF 65/-

AG527 — *drachm.* Similar. *Müller* 136 *nearly* VF/F 18/6

AG528 Antigonus Gonatas or Doson, 277-220 B.C., Æ 16. Macedonian shield. R. Macedonian helmet .. VF/F 10/6

AG529 **MOESIA INFERIOR, Tomi,** Gordian III, Æ 26. Bust r. R. Asclepios standing l. *B.M.C.*—.. .. F 27/6

AG530 **THRACE, Odessus,** Gordian III and Tranquillina, Æ 27. Bust of Gordian and Tranquillina facing each other. R. Fortune seated l. *B.M.C.*—.. F 27/6

AG531 **Chersonesus,** 480-350 B.C., *hemidrachm.* Lion looking back. R. Quadripartite incuse; in two deeper quarters pellet and palm. *B.M.C.* 10 *good* F 17/6

AG532 **ILLYRIA, Dyrrhachium,** 250-229 B.C., *drachm.* Hd. of Heracles in lion's skin. R. Pegasus flying r. *B.M.C.* 25 VF/F 25/-

AG533 **EUBOEA, Eretria,** 369-336 B.C., *drachm.* Hd. of nymph l. R. Hd. of bull three-quarter r. *B.M.C.* 11 *nearly* VF 30/-

AG534 **COLONIES OF CORINTH, Anactorium,** 350-300 B.C., *stater.* Pegasus flying r. R. Hd. of Pallas r. *B.M.C.* 33 VF 65/-

AG535 **PELOPONNESUS, Sicyon,** 400-300 B.C., *hemidrachm.* Himera l. R. Dove flying l. *B.M.C.* 124 *good* F 12/6

AG536 **CRETE, Gortyna,** 431-300 B.C., *didrachm.* Europa in a tree facing, with eagle on her lap. R. Bull r., turning his hd. back and licking raised r. hind hoof; below, gad-fly. *B.M.C.*—; *Svoronos* xv, 1 *RR,* F/VF £15

AG537 **PONTUS, Pharnacia,** 121-63 B.C., Æ 20. Hd. of Zeus r. R. Eagle l. on thunderbolt. *B.M.C.* 2 .. F 5/6

AG538 **BOSPORUS, Kings of,** Sauromates I, 94-124 A.D., Æ 27. Bust r. R. MH in wreath. *Obv. B.M.C.* 12, R *B.M.C.* 18 .. .. .. *good* F 21/-

AG539 — Æ 24. Ivory chair with crown on it. R. Similar. *B.M.C.* 25 F 15/-

AG540 Cotys II, 124-132 A.D., Æ 22. Bust r. R. Shield between sword and axe. *B.M.C.* 4 .. .. F 15/-

AG541 Rhoemetalces, 132-154 A.D., Æ 25. Bust r. R. Similar to AG538. *B.M.C.* 8 *good* F/*fair* 21/-

AG542 Sauromates II, 172-211 A.D., Æ 26. Bust r. R. Aphrodite seated l., holding patera and sceptre, on l. hd. of Sept. Severus. *B.M.C.* 19 .. *good* F/F 21/-

AG543 Ininthimeus, 235-239 A.D., Æ 21. Bust of Ininthimeus r. facing bust of Aphrodite. R. Aphrodite seated l. *B.M.C.* 5 F 15/-

AG544 Rhescuporis VI, 304-342 A.D., Æ 16. Bust r. R. Bust of Emperor r. *B.M.C.*— F 15/-

AG545 **BITHYNIA, Nicaea,** Valerian, Æ 25. Bust r. R. Valerian l. giving hand to Gallienus, to r. draped female figure. *B.M.C.*— .. .. .. *R, fair* 25/-

AG546 **MYSIA, Pergamum,** 200-133 B.C., *cistophoric tetradr.* Cista mystica in wreath. R. Bow-case between two serpents. *B.M.C.* 106 .. .. .. VF 60/-

AG547 **AEOLIS, Cyme,** 2nd-1st cent. B.C., Æ 17. Bust of Artemis r. R. Vase with one handle. *B.M.C.* 87 .. F/*good* F 12/6

AG548 **IONIA, Miletus,** 478-390 B.C., *diobol.* Hd. of lion r. R. Star in incuse. *B.M.C.* 34 .. .. VF 17/6

AG549 **PISIDIA, Antioch,** Caracalla, Æ 32. Hd. r. R. Victory advancing l. *B.M.C.* 48 F 18/6

AG550 Julia Domna, Æ 22. Bust r. R. Fortune standing l. *B.M.C.* 35 *good* F/F 18/6

AG551 Volusian, Æ 23. Bust r. R. Legionary eagle between two standards. *B.M.C.* 130 .. .. F 12/6

AG552 **LYCIA, Masicytes,** 81-27 B.C., *drachm.* Hd. of Apollo r. R. Lyre in shallow incuse square. *B.M.C.* 18 VF 22/6

AG553 **CILICIA, Celenderis,** 4th-3rd cent. B.C., *obol.* Forepart of Pegasus r. R. Goat r., looking back. *B.M.C.* 31 F 21/-

AG554 **Olba,** Tiberius, Æ 23. Hd. r. R. Thunderbolt. *B.M.C.* 12 .. VF 25/-

AG555 **Soli,** 385-333 B.C., Æ 13. Hd. of Pallas r. R. Bunch of grapes. *B.M.C.* 34 F/VF 8/6

AG556 **Tarsus, Satraps of,** Datames, 378-372 B.C., *stater.* Female hd. facing. R. Helmeted male hd. r., Phoenician inscription. *B.M.C.* 29 *var.* .. VF £6/10/-

AG557 **SYRIA, Antioch,** Vespasian, Æ 20. Hd. r. R. Veiled bust of Tyche r. *B.M.C.* 222 .. .. .. F/VF 9/6

AG558 Domitian, Æ 20. Hd. l. R. S.C. in laurel wreath. *B.M.C.* 248 VF/F 10/6

AG559 Nerva, Æ 27. Hd. r. R. Similar. *B.M.C.* 259 .. .. *good* F/VF 17/6

AG560 Hadrian, Æ 18. Bust r. R. Similar to AG557. *B.M.C.* 302 *nearly* VF 8/6

AG561 **PHOENICIA, Aradus,** early 4th cent. B.C., *stater*. Laur., bearded male hd. r. R. Galley r. over waves. *B.M.C.* 21 *good* F/F 84/-

AG562 — 400-350 B.C., *obol*. Similar. *B.M.C.* 45 .. .. .. VF 22/6

AG563 — 350-332 B.C., Æ 13. Marine deity, half human, half fish, l. R. Galley r. over waves. *B.M.C.* 85 .. *good* F 15/-

AG564 — 137-127 B.C., Æ 14. Heads of Zeus and his consort, jugate r. R. Prow of galley l. *B.M.C.* 99 *good* F 12/6

AG565 Nero, Æ 22. Bust of Astarte-Europa r.; in front, small hd. of Nero r. R. Humped bull galloping l. *B.M.C.*— *good* F 12/6

AG566 **Byblus,** Caracalla, Æ 24. Bust r. R. Tetrastyle temple with Astarte r., crowned by Nike. *Cf. B.M.C.* 29 F 22/6

AG567 **Sidon,** 44-118 A.D., Æ 14. Veiled hd. of Tyche r. R. War-galley l. *B.M.C.* 175 .. .. .. *good* F 10/6

AG568 **EGYPT,** Ptolemy II, 284-247 B.C., *tetradr.* Hd. of Ptolemy I, r. R. Eagle on thunderbolt l. *B.M.C.*— *nearly* VF/F 35/-

AG569 Ptolemy V, 204-181 B.C., Æ 23. Hd. of Heracles r. in lion's scalp. R. Similar, but looking back. *B.M.C.* 7 .. F 7/6

AG570 Ptolemy VIII, 170-117 B.C., Æ 28. Hd. of Cleopatra I. R. Similar to AG568. *B.M.C.* 6 .. .. .. F 7/6

AG571 Ptolemy X, 117-81 B.C., *tetradr.* Similar to AG569 .. .. F 27/6

AG572 Ptolemy XIII, 55-52 B.C., *tetradr.* Similar .. .. F 27/6

AG573 **Alexandria,** Commodus, *bill. tetradr.* Hd. r. R. Bust of Selene l. *B.M.C.* 1404 VF 10/6

AG574 Severus Alexander, *bill. tetradr.* R. Hd. of Helios r. *B.M.C.* 1599 F/VF 7/6

AG575 — R. Bust of Pallas r. *B.M.C.* 1603 VF 12/6

AG576 — R. Hd. of Sarapis r. *B.M.C.* 1654 VF 10/6

AG577 Julia Mamaea, *bill. tetradr.* R. Homonoia standing l. *B.M.C.* 1736 *good* F 10/6

AG578 Philip I, *bill. tetradr.* R. Similar. *B.M.C.* 1960 .. .. .. VF 7/6

AG579 — R. Sarapis standing l., looking back. *B.M.C.* 1980 .. .. VF 7/6

AG580 — R. Alexandria standing l., holding bust of Sarapis. *B.M.C.* 1989 VF 7/6

AG581 Philip II, as Caesar, *bill. tetradr.* R. Triptolemus in car drawn by two serpents. *B.M.C.* 2041 .. .. .. VF 15/-

AG582 Trajan Decius, *bill. tetradr.* R. Athena seated l. *B.M.C.* 2071 VF 8/6

AG583— R. Homonoia seated l. *B.M.C.* 2075 VF 8/6

AG584 — R. Sarapis standing l. *B.M.C.* 2079 .. .. VF 10/6

AG585 Etruscilla, *bill. tetradr.* R. Athena standing l. *B.M.C.* 2088 F/VF 8/6

AG586 — R. Homonoia standing l. *B.M.C.* 2091 .. .. VF 10/6

AG587 Hostilianus, *bill. tetradr.* R. Bust of Zeus r. *B.M.C.* 2098 .. VF 10/6

AG588 Trebonianus Gallus, *bill. tetradr.* R. Homonoia standing l. *B.M.C.* 2104 VF 8/6

AG589 Volusian, *bill. tetradr.* R. Bust of Asclepios r. *B.M.C.* 2109 *good* F 15/-

AG590 Salonina, *bill. tetradr.* R. Dikaiosyne standing l. *B.M.C.* 2246 VF 7/6

AG591 — R. Elpis advancing l. *B.M.C.* 2254 .. .. .. *good* VF 10/6

AG592 — R. Tyche reclining l. *B.M.C.* 2266 .. .. VF/*good* F 8/6

AG593 Quietus, *bill. tetradr.* R. Homonoia standing l. *B.M.C.* 2302 *good* F/F 55/-

AG594 Claudius II, *bill. tetradr.* R. Nike advancing r. *B.M.C.* 2321 .. VF 5/6

AG595 — R. Nike advancing l. *B.M.C.* 2323 .. .. VF 5/6

AG596 — R. Bust of Anubis r. *B.M.C.* 2327 .. .. F 5/6

AG597 — R. Eagle r., wreath in beak. *B.M.C.* 2336 .. .. .. VF 5/6

AG598 **LIBYA,** *didrachm.* Hd. of Heracles in lion's scalp l. R. Lion advancing r. *Müller* 350 .. *good* F £12/12/-

AG599 **ZEUGITANA, Carthage,** *didrachm.* Hd. of Persephone l. R. Horse r., three pellets and Punic letter between legs. *Müller* 97 .. *nearly* VF £10/10/-

AG600 **MELITA,** 2nd-1st cent. B.C., Æ 25. Bust of Isis l. R. Four-winged figure of Osiris kneeling l. .. .. F 15/-

ROMAN COINS.

All have the head or bust of the emperor or empress to r., unless otherwise stated, and the short description refers to the reverse.

B1101 **J. Caesar,** *denarius.* Hd. of Venus r. R. Trinacrus l., holding triskelis, foot on prow. *C.* 1. *Ex Ryan coll.* *RR, good* F/VF £6

B1102 **Cassius,** *den.* C . CASSI . IMP. Tripod surmounted by the cortina, on either side a fillet. R. LENTVLVS SPINT. Jug and lituus. *Ex Ryan coll. C.* 7 .. F £17/10/-

B1103 **Mark Antony,** *den.* Hd. of Jupiter Ammon r. R. ANTONIO AVG . SCARPVS IMP. Victory walking r. *C.* 1 F/*nearly* F 65/-

B1104 — Hd. of M. Antony r. R. ANTONIVS / AVG . IMP . III in two lines across the field. *C.* 2 .. .. *good* F/*good* VF 85/-

B1105 **Augustus,** *den.* Hd. of Honour r. R. Parthian kneeling r., presenting standard. *C.* 428 .. .. *R,* F/*good* F 40/-

B1106 — Hd. of Augustus l. R. SIGNIS RECEPTIS. Soldier standing l., hd. r., holding eagle and trophy. *C.* 262. *Ex Ryan coll.* *good* F/*fair* 55/-

B1107 — Hd. l. R. S . P . Q . R . Roman triumphal quadriga walking r., ornate with *one* palmette and *one* Victory. *C.* 275 EF/VF £6/10/-

B1108 — Hd. r. R. L . LIVINEIVS REGVLVS, Victory walking r. *C.* 443. *Ex Sydenham coll.* *R, slightly off centre,* VF £5/15/-

B1109 — R. Augustus and Agrippa seated l. on platform, ornamented with three prows. *C.* 529 .. .. *fair* 70/-

B1110 Equestrian statue of Augustus r. R. Cippus inscribed S . P . Q . R . / IMP . CAE . / QVOD V . / M . S . EX / EA P . Q . IS / AD . A . DE. *C.* 543 .. .. *RR, nearly* VF £6/10-

B1111 *Quinarius.* Hd. l. R. Victory r. crowning trophy. *C.* 387 .. *fair* 17/6

B1112 *As.* Hd. r. R. ROM . ET AVG. Altar of Lugdunum. *C.* 240 .. .. F 20/-

B1113 — **and Tiberius,** *den.* Laur. hd. of Augustus r. R. Bare hd. of Tiberius r. *C.* 2. *Ex Sydenham coll.* *nearly* VF £6

B1114 **Drusus,** *sestertius.* Cornucopiae crossed, with heads of Drusus' children facing each other. R. S . C . within inscription. *C.* 1 .. .. F 35/-

B1115 *As.* Hd. l. R. Similar. *C.* 2 *good* F 10/6

B1116 **Germanicus,** *as.* Hd. r. R. Similar. *C.* 9 .. .. F 10/6

B1117 **Claudius,** *as.* Hd. l. R. CONSTANTIAE AVGVSTI S . C . Pallas standing l. *C.* 14 F 8/6

B1118 **Galba,** *den.* R. VICTORIA GALBAE AVG. Victory r. on globe. *C.* 317 *good* F/F 45/-

B1119 **Vespasian,** *den.* R. Fortune standing l., holding cornucopiae and touching prow. *C.* 84 .. .. VF 15/-

B1120 *Sestertius.* R. Pax standing l. *C.* 326 *good* F/F 21/-

B1121 *Dupondius.* R. Felicity standing l. *C.* 152 .. .. .. F/*fair* 8/6

B1122 **Domitian,** *as.* R. Annona seated r., child before her l. *C.* 13 *good* F 12/6

B1123 — R. Altar. *C.* 417 .. F 7/6

B1124 *Dupondius.* R. Fortuna standing l. *C.* 120 .. .. F 10/6

B1125 **Trajan,** *den.* R. Victory advancing l. *C.* 76 .. .. VF 10/6

B1126 *Sestertius.* R. Octastyle temple with the statue of Pax. *C.* 552 *good* F 65/-

B1127 *Semis.* R. Hercules standing l. on pedestal. *C.* 336 .. VF/F 10/6

B1128 **Hadrian,** *sestertius.* R. Roma seated r., greeting emperor standing l. *C.* 91 *nearly* VF 45/-

B1129 — R. Annona standing l., modius at her feet. *C.* 180 .. .. F 15/-

B1130 — R. Hadrian and Trajan standing facing each other, holding globe. *C.* 523 *good* F 25/-

B1131 — R. Fortune seated l. *C.* 756 *good* F 10/6

B1132 — R. Fortune standing l. *C.* 767 *good* VF 32/6

B1133 — R. Roma seated l., holding Victory and spear. *C.* 1188 .. *good* F 15/-

B1134 — R. Felicity standing l. *C.* 1192 F 8/6

B1135 *As.* R. Aegyptos reclining l., holding sistrum, in front ibis. *C.* 111 .. F 7/6

B1136 — R. Legionary eagle between two standards. *C.* 1182 .. *nearly* VF 10/6

B1137 **Sabina,** *den.* R. Juno standing r. holding patera and long sceptre. *C.* 43 VF 21/-

B1138 *As.* R. Vesta seated l. *C.* 66 *good portrait, otherwise* F/*fair* 16/-

B1139 **Antoninus Pius,** *den.* R. Piety l. at altar. *C.* 286 *v.* .. .. VF 15/-

B1140 — R. Pax standing l. *C.* 573 VF 8/6

B1141 *Sestertius.* R. Temple with Genius of the Senate holding standard and laurel-branch. *C.* 332 .. .. F 17/6

B1142 — R. Liberty standing l., holding sceptre and liberty cap. *C.* 540 VF 35/-

B1143 — R. Concordia standing l., holding two standards. *C.* 988 .. F/*fair* 8/6

B1144 — **and M. Aurelius,** *den.* Hd. of Antoninus r. R. Hd. of M. Aurelius r. *C.* 13 *nearly* VF 17/6

B1145 **Faustina I,** *den.* R. Peacock r. *C.* 175 .. .. .. *good* F 15/-

B1146 *As.* R. Vesta standing l., holding palladium and long torch. *C.* 269 F 8/6

B1147 **M. Aurelius,** *den.* R. Virtus standing l., holding spear and parazonium. *C.* 903 *good* F/F 8/6

B1148 *Sestertius.* R. Funeral pyre. *C.* 98 *nearly* F/*fair* 22/6

B1149 **Faustina II,** *sest.* R. Eternity l., leaning on column and holding Phoenix on globe. *C.* 7 .. .. *nearly* VF 17/6

B1150 — R. Venus seated l. *C.* 275 *good* F 10/6

B1151 — R. Peacock in pride l. *C.* 72 VF/*fair* 10/6

B1152 — R. Altar. *C.* 76 VF/F 12/6

B1153 — R. Venus standing l., holding Victory. *C.* 283 .. .. F 8/6

B1154 **Commodus,** *den.* R. Liberalitas standing l., holding cornucopiae and tessera. *C.* 325 .. .. VF 10/6

B1155 *Sestertius.* R. Pietas l. at altar. *C.* 31 F/*fair* 10/6

B1156 — Young head r. R. Pallas l. at altar. *C.* 234 .. .. VF/*good* F 25/–

B1157 — Bearded bust r. R. Jupiter l., holding extended arm over Commodus l. *C.* 274 .. .. VF/*good* F 27/6

B1158 — Young head r. R. Liberty l. *C.* 330 .. .. .. VF/*fair* 12/6

B1159 — Bearded hd. r. R. Roma seated l., holding Victory. *C.* 925 *nearly* VF/F 15/–

B1160 *As.* Very young bust r. R. Sacrificial implements. *C.* 405 .. F 12/6

B1161 **Crispina,** *den.* R. Juno l. *C.* 21 *nearly* VF 15/–

B1162 *As.* R. Similar. *C.* 24 .. F 6/6

B1163 **Pertinax,** *den.* R. Equity standing l. *C.* 2 .. .. .. *nearly* VF £7

B1164 **Albinus,** *den.* R. Clasped hands holding legionary eagle. *C.* 24 *good* VF 45/–

B1165 **Septimius Severus,** *sest.* R. Annona seated r., child before her, and prow. *C.* 554 F/*fair* 18/6

B1166 **Julia Domna,** *sest.* R. Juno standing l., at her feet peacock. *C.* 88 .. F 10/6

B1167 **Caracalla,** *sest.* R. Security seated r. *C.* 193 .. .. .. *good* F 25/–

B1168 **Plautilla,** *den.* R. Plautilla r. and Caracalla l. clasping hands. *C.* 10 VF 15/–

B1169 **Macrinus,** *den.* R. Jupiter standing l., in front small figure of the emperor facing. *C.* 142 .. .. EF 18/6

B1170 **Diadumenian,** *den.* R. Caesar l., holding standard, two standards behind him. *C.* 3 .. .. .. VF 65/–

B1171 **Julia Paula,** *den.* R. Concordia seated r. *C.* 6 .. .. .. VF 35/–

B1172 — R. Julia Paula r. clasping hands with Elagabalus. *C.* 12 .. VF 55/–

B1173 **Julia Soemias,** *den.* R. Venus standing l. *C.* 8 .. .. .. EF 21/–

B1174 **Julia Maesa,** *den.* R. Pudicitia seated l. *C.* 36 .. .. EF/VF 15/–

B1175 — R. Felicity standing l., at her feet. *C.* 45 .. .. VF 15/–

B1176 **Julia Mamaea,** *den.* R. Similar to B1166. *C.* 35 .. .. *good* VF 12/6

B1177 *Sestertius.* R. Felicity standing l., leaning on column. *C.* 26 .. VF 17/6

B1178 — R. Venus seated l., holding statue of Victory. *C.* 69 .. *nearly* VF 15/–

B1179 **Paulina,** *den.* R. Paulina l. on eagle's back. *C.* 2 .. *good* F 95/–

B1180 **Gordian III,** *sest.* R. Emperor seated l. *C.* 231 .. F/*nearly* F 6/6

B1181 — R. Jupiter standing l. *C.* 111 VF/F 8/6

B1182 — R. Apollo seated l., holding branch. *C.* 273 VF/*nearly* VF 15/–

B1183 **Philip I,** *antoninianus.* R. FELI / CITAS / IMP P. within laurel-wreath. *C.* 39 VF 25/–

B1184 *Sest.* R. Annona standing l. at her feet modius. *C.* 26 *nice green patina,* VF 12/6

B1185 — R. Fortune seated l. *C.* 67 VF/F 6/6

B1186 — R. Salus l., feeding serpent rising from altar. *C.* 206 *nearly* VF/VF 9/6

B1187 **Philip II,** *ant.* R. Philip II with his father seated l. *C.* 17 .. .. VF 7/6

B1188 *Sest.* R. Similar. *C.* 18 VF 12/6

B1189 **Trajan Decius,** *ant.* R. Two Pannoniae standing facing. *C.* 86 VF 8/6

B1190 **Herennius Etruscus,** *ant.* R. Sacrificial implements. *C.* 14 .. VF 12/6

B1191 **Trebonianus Gallus,** *sest.* R. Piety standing l. at altar. *C.* 86 *small flan, good* F 8/6

B1192 **Valerian,** *sest.* R. Concordia l. *C.* 40 .. .. .. *irregular flan, but* VF *portrait, otherwise good* F 10/6

B1193 — R. Victory standing l. *C.* 233 *nearly* VF/F 15/–

B1194 **Gallienus,** *ant.* Bust l. R. VICTORIA GERMANICA. Victory l., stepping on seated captive. *C.* 1059 .. *good* F 5/6

B1195 — R. Victory l. *C.* 1071 VF 6/6

B1196 *Sest.* R. Liberality l. *C.* 572 F/*fair* 10/6

B1197 **Postumus,** *ant.* R. HERC . DEVSONIENSI. Hercules r. *C.* 91 .. VF 8/6

B1198 — R. Aesculapius standing r. *C.* 336 VF 12/6

B1199 *Sest.* R. Similar to B1194 *nearly* VF 35/–

B1200 **Aurelian,** *den.* R. Similar. *C.* 255 VF 21/–

SILVER COINS OF GREAT BRITAIN.

Coins of Charles I: a representative collection of Tower and Provincial pieces, including some interesting rarities and varieties.

TOWER MINT.

Crowns.

CH1 **Type 2a,** *mm.* harp. · CAROLVS · D'. G'. MAG'. BRIT'. FRA'. ET · HIB'. REX ·ꝏ· King on small horse l., broad cross on housings. R. Harp ' CHRISTO ·ꝏ· AVSPICE ·ꝏ· REGNO ·ꝏ· oval garnished shield over cross fourchée; CR above .. *nearly* VF £11

CH2 **Type 2b¹,** *mm.* plume. *Obv.* Similar to last. R. · ⁝ · CHRISTO · · ⁝ · · AVSPICE · · ⁝ · · REGNO · ⁝ · plume · ⁝ · large plume between CR over oval garnished shield: no cross fourchée F/*good* F, *R* £8

CH3 **Type 2b²,** *mm.* harp / rose / plume (*obv.*), harp (*rev.*). *Obv.* Similar to last. R. · CHRISTO · AVSPICE · REGNO · harp ·. Similar to last, but cross fourchée appears at sides of shield .. *about* VF, *RRR* £24

CH4 **Type 3a,** *mm.* bell. · CAROLVS · D'. G'. MAG'. BRI'. FRA'. ET'. HI'. REX'. King on clumsy horse l., scarf flies from waist, no caparisons or ground-line. R. Bell ·ꝏ· CHRISTO · AVSPICE · REGNO ·ꝏ· oval garnished shield without CR .. .. F £6

CH5 **Type 3b,** *mm.* crown. *Obv.* Similar to last. R. · CHRISTO · AVSPICE · REGNO, crown oval garnished shield with plume above *fair*/F, *R* £7

CH6 **Type 4** (*Parliament*), *mm.* eye. · CAROLVS · D'. G'. MAG'. BRI'. FRA'. ET : HIB'. REX. King on foreshortened horse l. R. Similar to type 3a .. *nearly* VF £8/10/–

Halfcrowns.

CH7 **Type 1a¹,** *mm.* lis. CAROLVS · D · G · MAG · BRI · FR · ET · HI · REX ·. King on horseback l., plume on head and crupper, crowned rose on housings, ground-line below. Sword raised to strike, breaks legend after CA; fine style. R. CHRIS / TO · AVS / PICE · R / EGNO, lis square-topped shield over cross fourchée .. *about* VF, *scarce* 85/–

CH8 **Type 1a²,** *mm.* lis. *Obv.* Similar to last, but colon stops in legend, no rose or ground-line, and not such fine style. R. Similar to last, lis CHRI / STO AV / SPICE / REGNO *a really good* F, *R* 80/–

CH9 **Type 1a³,** *mm.* cross on steps (*obv.*), cross on steps / lis, (*rev.*). Similar to last but even cruder style. R. CHRISTO · AVSPICE REGNO, no cross fourchée *nearly* VF, *RR* £6

CH10 **Type 2a,** *mm.* plume. CAROLVS'. D'. G'. MAG'. BRIT'. FRA'. ET · HIB · REX. King on smaller horse l., no plume on crupper, broad cross on housings; no ground-line. R. · : · CHRISTO · AVSPICE · REGNO · : · plume, flat oval garnished shield, CR above *fair*/*nearly* F 20/–

CH11 — *mm.* rose/plume (*obv.*), rose (*rev.*), Similar to last .. F, *scarce* 40/–

CH12 **Type 2c,** *mm.* harp. · CAROLVS'. D'. G'. MAG'. BRIT'. FRA'. ET · HIB'. REX ·. Similar to last. R. Harp CHRISTO AVSPICE REGNO, broad oval shield, C R at sides *good* F 32/6; *almost* VF 40/–

CH13 — *mm.* portcullis *good* F/*nearly* VF 37/6

CH14 **Type 3a¹,** *mm.* bell. King on horseback l., no housings, no ground-line; scarf flies two-ended from king's waist. R. Oval garnished shield *good* F/*nearly* VF 20/–

CH15 — *mm.* crown (*obv.*), crown / bell (*rev.*) .. .. *good* F, *scarce* 25/–

CH16 — *mm.* crown .. *about* F 12/6

CH17 — *mm.* tun F 15/–; *good* F/*nearly* VF 21/–

CH18 **Type 3b,** *mm.* crown (*obv.*), crown/bell (*rev.*). Similar to last, but plume over shield .. .. *fair*/F, *RR* 85/–

CH19 **Type 3a²,** *mm.* anchor r. Similar to 3a¹, but horse more crude, and cloak flies from king's shoulder F/*good* F 17/6

CH20 — *mm.* triangle .. *nearly* F 12/6

CH21 — *mm.* star, ground below horse *nearly* F 12/6

CH22 **Type 3a³,** (*Parliament*), *mm.* (R). Similar but coarser work *nearly* VF 15/–

CH23 — *mm.* eye *nearly* VF/*fair* 12/6

CH24 — *mm.* sun .. *fair*/F 12/6

CH25 **Type 4,** *mm.* (P), (*Parliament*), finer work, foreshortened horse with mane before chest .. .. *good* F 15/–

CH26 — *mm.* triangle in circle *good* F 15/–; VF 25/–

CH27 **Type 5** (*Parliament*), *mm.* sun, tall horse of fine style F/*good* F, *R* 35/–

Shillings.

CH28 **Type 1,** *mm.* lis. CAROLVS : D'. G'. etc. bust l. in ruff. R. CHRIS / TO : AVS / PICE : R / EGNO : lis, square-topped shield over cross fourchée .. .. *good* F 22/6

CH29 **Type 1a,** *mm.* cross calvary (*obv.*), cross calvary/lis (*rev.*). Similar to last, but bust in armour and scarf F, *scarce* 25/–

CH30 — *mm.* cross calvary/lis. *From the Musselburgh find* *almost* VF, *scarce* 52/6

CH31 **Type 1b²,** *mm.* plume, similar to last. R. Plume over shield, no cross F, *but very weakly struck on obv.*, *R* 30/–

CH32 **Type 2a,** *mm.* rose. *Obv.* as last, but more armour visible. R. Flat oval shield, CR above . . . . *good* VF, *scarce* 15/–

CH33 — *mm.* rose/plume (*obv.*), rose *rev.* VF 25/–

CH34 — *mm.* plume . . . . *fair* 8/6

CH35 **Type 2b,** *mm.* rose, as last, but plume over shield . . F/*good* F, *RR* 75/–

CH36 **Type 2b var.,** *mm.* plume. Similar to last, but · · : · · between words of CHRISTO legend and shield more elaborately garnished. *Struck in collar* (?). *Struck as a proof. Ex Hamilton Smith and Ryan colls.* EF, *RRRR* £18/10/–

CH37 **Type 3¹,** *mm.* harp · : · · : · CAROLVS . etc. R. · : · CHRISTO · AVSPICE · REGNO · : · harp, broad shield garnished, C R at sides . . . . . *good* F 15/–

CH38 — *mm.* portcullis, as last, but simple stops F 13/–; *good* F/*nearly* VF 17/6

CH39 **Type 3a,** *mm.* bell, R. Almost circular garnished shield; no C R F/*nearly* VF 10/–

CH40 — *mm.* tun *a really good* VF 10/–

CH41 **Type 3b.** Similar, but plume over shield. *Brilliant proof. Ex Fitch and Ryan colls.* FDC, *large, round and toned, RRRR* £26

CH42 **Type 4¹ var.,** *mm.* tun, large Aberystwyth head, large XII behind. R. Square-topped shield over cross fleury, CHRISTO legend . . . . . *nearly* F 10/–

CH43 **Type 4²,** *mm.* tun. Smaller head, small XII . . . . . *nearly* F 10/6

CH44 **Type 4³,** *mm.* anchor downwards, small head, large XII . . *good* F 12/6

CH45 — *mm.* anchor downwards (*obv.*), anchor r. (*rev.*) . . . . *good* F 12/6

CH46 **Type 4⁴,** *mm.* star. Old bust with pointed beard . . . . . *fair* 5/–

CH47 — *mm.* triangle in circle *good* F 12/6

Sixpences.

CH48 **Type 1,** *mm.* lis. As the shilling, date 1625 above shield F/*good* F 25/–

CH49 **Type 1a¹,** *mm.* cross calvary, 1626 *fair, R* 21/–

CH50 **Type 2a,** *mm.* plume (as shilling), no date . . . . . *good* F 21/–

CH51 **Type 2b,** *mm.* plume (as shilling) *a really good* F, *RR* 80/–

CH52 **Type 3,** *mm.* portcullis (as shilling 3¹) *fair* 12/6

CH53 **Type 3*,** pattern (?), *mm.* rose, no inner circles, of fine style *good* F, *holed, RRR* £6/6/–

CH54 **Type 3 variety,** no C R P/*fair, RRR* 22/6

CH55 **Type 3a,** (as shilling), *mm.* bell *nearly* F 9/6

CH56 — *mm.* crown . . . . *fair* 6/–

CH57 — *mm.* tun . . *about* F 12/6

CH58 **Type 4¹,** first Aberystwyth bust *nearly* VF 35/–

CH59 — *mm.* anchor . . . . VF 42/–

CH60 **Type 4²,** second bust, *mm.* triangle F 16/–

CH61 **Type 4³,** (as shilling 4⁴), *mm.* triangle *nearly* VF 20/–

Halfgroats.

CH62 **Type 1,** *mm.* cross on steps. C : D : G : ROSA · SINE · SPINA, crowned rose and inner circle both sides. R. IVS : THRON : FIRMAT *good* F 15/–

CH63 **Type 1a.** Similar, no inner circles, *mm.* castle . . . . F, *R* 14/–

CH64 **Type 2a.** Similar to the sixpence, but no C R, *mm.* plume F, *pierced* 4/6

CH65 **Type 3¹,** *mm.* crown. CAROLVS'. D'. G'. etc., bust as type 3 coins. R. IVSTITIA · THRONVM · FIRMAT, oval shield between C R, no inner circles . . *good* F 8/–

CH66 **Type 3¹,** *mm.* portcullis, inner circle on *obv.* . . . . *good* F 11/–

CH67 **Type 3a¹,** as the other 3a coins, *mm.* bell, no inner circles . . . . VF 8/6

CH68 — *mm.* tun . . F/*good* F 5/6

CH69 **Type 3a³,** inner circle both sides, *mm.* star . . . . *a really good* F 6/–

CH70 — *mm.* triangle in circle *about* F 4/–

CH71 **Type 3a⁴,** Aberystwyth bust, no inner circles, *mm.* anchor r. F, *scarce* 10/6

CH72 **Type 3a⁷,** *mm.* sceptre (Parliament). Old bust of crude style . . . . F 7/6

Pennies.

CH73 **Type 2a¹,** *mm.* plume. R. Oval shield, no inner circles . . VF 12/6

CH74 **Type 3¹ var.,** *mm.* harp, inner circle on *obv.* Shield between C R *fair, RR* 8/–

CH75 **Type 3²,** *mm.* portcullis (*obv.* only), similar but no inner circles and no C R F 8/6

CH76 **Type 3³,** *mm.* harp, inner circle on *obv.*, no C R . . . . *good* F 12/6

CH77 **Type 3a¹,** *mm.* pellets, no inner circles, round shield without C R VF, *but weak* 12/6

CH78 **Type 3a³ var.,** *mm.* pellet, Aberystwyth bust, inner circle on *obv.* *good* F, *scarce* 12/6

Halfpenny.

CH79 Rose each side, no legend *nearly* VF 8/6

BRIOT'S MINT.

CH80 **Halfcrown.** *Mm.* anchor and B. CAROLVS · D : G · MAGN · BRITANN · FR · ET · HIB · REX ·. King on horseback l., ground below. R. : Anchor and B CHRISTO · AVSPICE · REGNO, small oval garnished shield crowned, C and R, both crowned at sides *fair* 20/–; *good* F 75/–

BRIOT'S MINT—*continued.*

CH81 **Shilling,** first type, *mm.* B. Similar, but cross fourchée on *rev.*, legend starts 7 o'clock CHRIS / TO · AV / SPICE / REGNO B F, *RRR* £5/5/–

CH82 Second type *mm.* anchor r. CAROLVS · D : G · etc., bust in lace collar l. R. Anchor CHRISTO · AVSPICE · REGNO · square-topped shield over cross fleury *about* F 15/–

CH83 **Sixpence,** first type, *mm.* B and flower (*obv.* only), small bust with scarf over cuirass .. .. *nearly* F/F 15/–

CH84 — *mm.* B and flower (*obv.*), B (*rev.*) *good* F/*nearly* VF 24/–

CH85 Second type, *mm.* anchor, larger bust without scarf .. .. .. F 14/6

CH86 — — Similar, but with CHISTO (*sic*) *rev.* .. .. .. VF/F 25/–

CH87 — *mm.* anchor and mullet (*obv.*), anchor (*rev.*) .. .. *nearly* VF 24/–

CH88 — — Similar, but with CHISTO *rev.* *rev. shield weak, otherwise* VF 27/6

CH89 **Halfgroat,** no *mm.* but B below bust. *A neat little coin* .. .. EF 35/–

CH90 *Pattern*, uncrowned bust in ruff r. R. Two C's crowned, B below, FIDEI DEFENSOR VF 15/–; EF 25/–

YORK MINT.

CH91 **Halfcrowns,** Type 1, *mm.* lion. King on horseback l. R. Garnished square-topped shield, CR at sides. A contemporary forgery in base metal. .. *poor* 15/–

CH92 Type 3. Similar, but round shield without CR .. .. .. *fragment broken off flan, otherwise nearly* VF, *RR* 85/–

CH93 Type 4. "Base" issue. EBOR under horse. R. As above *good* F 75/–

CH94 Type 5. Tall horse, tail behind, EBOR below. R. Crowned square-topped shield, CR at sides *weak in parts, otherwise* VF 70/–

CH95 Type 6. Similar, but crowned oval garnished shield on *rev.*, CR at sides EF £6

CH96 Type 7. Similar, but horse with tail between legs. R. Crowned oval shield with lion-skin garniture .. *good* VF 85/–

CH97 **Shilling.** Type 2, *mm.* lion, crowned bust l. R. EBOr over square-topped shield VF/*nearly* EF 52/6

CH98 Type 5. Different bust. R. Crowned shield with lion-skinned garniture, EBOR below *one half weak, otherwise good* F 18/6

CH99 **Sixpence.** Type 1, *mm.* lion. R. Crowned oval garniture shield. (*Cat. No.* 1795, £10) .. *fair*/F, *RR* 80/–

CH100 Type 2. Similar, but CR by shield *small scratch in obv. field, otherwise* VF/*nearly* EF, *R* £5

CH101 **Threepence,** *mm.* lion. EBOR over shield .. .. .. F/*good* F 13/–

ABERYSTWYTH MINT.

CH102 **Halfcrown,** *mm.* book. King on horseback l. R. Plumes above oval shield, CHRISTO, etc. *Mor.* C/3 *var.* *poor*/F, *RRR* 60/–

CH103 **Shilling,** *mm.* book. Wide bust l., plume before face, small XII, no inner circle. R. As above. *Mor.* A/2 *nearly* VF, *R* 85/–

CH104 — Narrow bust. R. As above, but no pellets by *mm.* *Mor.* B/2 *var.* F, *R* 80/–

CH105 **Groat,** *mm.* book. Small bust, plume before. R. *Mm.* to l. of plumes. *Mor.* A *small*/2 *var.* .. .. .. VF 12/6

CH106 **Threepence.** Similar, but *mm.* to r. of plumes on *rev.* *Mor.* B/2 .. *pierced in centre* (*prior to* 1696 *recoinage*), F 10/6

CH107 **Half groat.** No plume before face, inner circle. R. Plumes in centre, inner circle. *Mor.* B/2 .. .. F 16/–

CH108 **Penny.** Similar. *Mor.* C/2 *nearly* F/*good* F, *R* 35/–

SHREWSBURY MINT.

CH109 **Pound,** 1642. King on horse l., plume behind, nothing below horse, : · : before CAROLVS. R. "Declaration" legend, XX and three plumes above, : · : before EXVRGAT, etc. *Mor.* A/4. *Ex Thelusson and Raynes coll.* *nearly* VF/F, *RRR* £58

CH110 **Half Pound,** 1642. King on horse l., Shrewsbury plume behind, ground line but no arms below horse. R. X and three plumes above "Declaration." *Mor.* D/2 *flaw in flan, otherwise good* F/VF, *R* £16

CH111 **Crown,** 1642. As above. R. V and three plumes above "Declaration." *Mor.* B/5. *Ex Ryan coll.* *nearly* VF, *R* £13

CH112 **Halfcrown,** 1642, *mm.* plume. As above, but no plume behind king. R. Three plumes over "Declaration." *Mor.* D/4 .. .. *nearly* F, *RR* £5/15/–

OXFORD MINT.

CH113 **Pound,** 1642, *mm.* plume, king on horse l., plume behind, riding over arms (but no cannon). R. · XX · and three plumes over "Declaration." *Mor.* C/2. (*Cat. No.* 1859, £50) .. .. .. *some solder marks on rev., fair*/F, *RR* £20

CH114 **Half Pound,** 1642. As above, but · X · on *rev.*, · : · : · before EXVRGAT *good* F/F, *R* £12/10/–

CH115 — 1643. Same *obv.* die as above. R. New die .. .. *good* VF, *R* £20

CH116 **Halfcrown,** 1642. *Mm.* "Shrewsbury" plume, king on horse l., no plume behind. R. Three plumes above "Declaration." This is a mule with a Shrewsbury "F" *obv.* die. *Mor.* B/2 F, *R* £5

CH117 — — *mm.* " Oxford " plume, plume behind king, ground-line below horse. *Mor.* C/2 .. *fair/good* F 30/–

CH118 — 1643. No ground below horse. R. Small letters in " Declaration." *Mor.* D/1. *This is a combination of dies unrecorded by Morrieson* .. .. VF, *RR* £6/10/–

CH119 — 1644. Briot type horse, *mm.* rosette on *obv.* R. One large and two smaller plumes over " Declaration," **plumes by date,** ox below. *Mor.* A/9. *This is a combination of dies unrecorded by Morrieson* *fair/nearly* F, *RRR* £10

CH120 — — Similar, but *mm.* : plume : on *obv.* R. Date in large figures, · ox · below. *Mor.* D/10 .. .. F 45/–

CH121 — — Similar, but *mm.* · plume on *obv.* R. Date in small figures, ox below, diamond stops in *rev.* field. *Mor.* E/6 F 50/–

CH122 — — Similar, but date in script figures and very small plumes either side of large central plume. *Mor.* C/19 F 50/–

CH123 — 1645. *Mm.* · plume · , grass under horse's feet. R. Three plumes of same size, small ox below date. R. *Mor.* G/8 F 40/–

CH124 — — *mm.* plume, pebbly ground below horse. R. Larger ox below date. *Mor.* B(1646)/2. *An interesting coin as Morrieson only knew of this obv. die with coins dated* 1646 .. F, *RR* £6

CH125 — 1646. *Mm.* · plume, ground below horse. R. ox below date, no marks in field. *Mor.* C/1 .. F/*nearly* F 47/6

CH126 — — Similar, but *rev.* legend commences at 1 o'clock, annulets by plumes, date and ox. *Mor.* C/4 .. F, *R* 70/–

CH127 **Shilling,** 1642. Shrewsbury *obv.* die with *mm.* " Shrewsbury " plume, large bust. R. " Declaration " in three lines, no ox. *Mor.* A/2 .. .. *fair*/F, *R* 35/–

CH128 — — Oxford dies both sides, colon stops. *Mor.* B/3 F/*nearly* VF 45/–

CH129 — 1643. Large bust. R. Large date, lines dividing " Declaration." *Mor.* F *var.*/3 *good* VF, *RR* £6

CH130 — 1644. Large date, ox below, no lines dividing " Declaration." *Mor.* A/5 *fair*/F 25/–

CH131 — — Small date, lozenge stops by plumes, date and ox. *Mor.* B *var.*/1 *ragged edge,* F 35/–

CH132 — — Similar, but different *obv.* die. *Mor.* D/1 .. .. *good* F/F 55/–

CH133 — — Similar, but rosettes by plumes on *rev.*, lozenges by date and ox. *Mor.* B/6. *This combination of dies was unknown to Morrieson* .. *fair*/F, *RR* 60/–

CH134 — — Central " Oxford " plume with small " Shrewsbury " plume either side above " Declaration," lozenges by date and ox. *Mor.* B/—. *Rev. die is not recorded by Morrieson* .. *good* F, *RRR* £5/5/–

CH135 **Sixpence,** 1643. *Obv.* Aberystwyth die, *mm.* book, plume before face. R. Three plumes without bands above " Declaration," small lettering. *Mor.* A/3 F/VF 50/–

CH136 — — Similar, but larger lettering on *rev.* *Mor.* A/4 .. *fair*/F 25/–

CH137 **Groat,** 1644. *Mm.* cross fleury, bust of fine work with lion's head epaulets. R. Central plume and two lis above " Declaration." *Mor.* B/2 .. *good* VF 57/6

CH138 — 1645. Large bust to edge of coin. R. Single plume and scroll over " Declaration." *Mor.* B/1 .. *nearly* F 22/6

CH139 **Threepence,** 1646 (over 1644). *Mm.* lis, three lis over " Declaration " *nearly* VF, *pierced* 10/6

CH140 **Halfgroat.** Aberystwyth type with large plume in centre of *rev.*, but with *mm.* lis .. .. .. *fair*/F 16/–

BRISTOL MINT.

CH141 **Halfcrown,** 1643. *Mm.* acorn (?) between 4 pellets, large plume behind king, no line under horse. R. *Mm.* BR monogram, legend commences at top, " Declaration." *Mor.* C/10 .. VF/F £5

CH142 — 1644. *Mm.* plume, small plume behind king. R. *Mm.* BR monogram. *Mor.* B/1 *nearly* F/F 45/–; VF 85/–

CH143 — — *mm.* pellet, BR mon. below horse. R. BR mon. below date. *Mor.* E/6 *flaw in flan, otherwise nearly* VF 80/–

CH144 **Shilling,** 1644. *Mm.* plume, king l. in lace collar. R. *Mm.* BR mon., " Declaration." *Mor.* B/1 *nearly* VF/*good* F 50/–

CH145 — — *mm.* 5 pellets, plume before king's bust. R. As above. *Mor.* C/1 VF/*good* F 60/–

LUNDY ISLAND MINT.

CH146 **Halfcrown,** 1646. *Mm,* · plume · , plumelet below horse. R. *Mm.* · plume, three plumes and scroll above " Declaration." *Mor.* B/2 *flaw in flan, good* F, *RR* £9

CH147 **Shilling,** 1645. *Mm.* plume, bust l. R. *Mm.* A, " Declaration " reads PROT : , A below date. *Mor.* A/2 *badly chipped,* F, *RRR* 80/–

CH148 — 1646. *Mm.* plume, small plumelet before bust. R. *Mm.* plume, three plumes and scroll above " Declaration," small date. *Mor.* B/1 *irregular flan with obv. field slightly burnished, good* F, *RR* £5

CH149 **Sixpence,** 1646. *Mm.* B (*obv.*), plume before bust. R. Plume and two plumelets over scroll, " Declaration," PROT. *Mor.* A/2 .. .. *nearly* VF/F 52/6

CH150 **Groat,** 1646. As above, but PRO *nearly* F/F 18/6

TRURO MINT.

CH151 **Crown,** undated. *Mm.* rose, king with half-facing head on horse l. R. Oval garnished shield, CHRISTO legend. *R.C.L.* 4 *nearly* VF/VF £6

CH152 — — Similar, but king with head in profile. *R.C.L.* 1 .. *nearly* VF £5/5/-

CH153 **Halfcrown,** undated. *Mm.* rose, king with head in profile, walking horse. R. Oblong garnished shield, CR at sides, CHRISTO, etc. *R.C.L.* 8
usual die flaw obverse a little off centre, centre weak, otherwise good F, *RR* £7/10/-

TRURO OR EXETER.

CH154 **Halfcrown,** undated. *Mm.* rose, somewhat as CH 151. *R.C.L.* 13
irregular flan, VF/*nearly* EF £7

CH155 — — Similar, but *mm.* : rose : on *rev.* *R.C.L.* 15 *var.* .. .. *face rather weak, otherwise almost* EF £12/10/-

EXETER MINT.

CH156 **Crown,** 1644. *Mm.* rose, as CH151, but dated at end of *rev.* legend. *R.C.L.* 8d VF/EF £11

CH157 — — Similar, but date divided by *rev. mm.* *R.C.L.* 6 *nearly* VF/VF £6/10/-

CH158 — 1645. *Mm.* castle, date to l. of *rev. mm.* *R.C.L.* 12*j* VF, *R* £11

CH159 **Halfcrown,** 1644. As CH156. R. **Declaration** type with **EX** below date. *R.C.L.* 29. (*Cat. No.* 1963, £40) *clipped* (*only* 175 *grains*), *nearly* F/F, *RRR* £13/10/-

CH160 **Shilling,** 1644. *Mm.* rose, bust l. R Oval garnished shield, date to l. of *mm.* *R.C.L.* 10 .. *nearly* F/*good* F, *R* 70/-

CH161 — 1645. *Mm.* rose, similar but small Irish harp on *rev.* *R.C.L.* 13
nearly VF, *R* £6/10/-

CHESTER MINT.

CH162 **Halfcrown,** undated. *Mm.* ⁝ , king on horse l. R. No *mm.* but legend ends . · . , crowned oval shield with lion-skin garniture *flaw in flan, good* F, *RR* £7

WEYMOUTH MINT.

CH163 **Halfcrown,** undated. *Mm.* castle (off coin), king on horse l., W beneath horse, grass below. R. *Mm.* helmet (off coin), crowned, square-topped, slightly garnished shield, CHRISTO, etc., no shading in crown. *Allen* B/5 *var.*
clipped (*only* 175 *grains*), *fair*/F, *RR* 75/-

NEWARK BESIEGED.

CH164 **Halfcrown,** 1646. High-arched crown, with richly jewelled band dividing C R over XXX. R. OBS : / NEWARK / 1646, struck on lozenge-shaped flan
(a) *a really good* F 95/- ; (b) *good* F, *flaw in edge, but showing design of plate from which it was struck* £6 ; (c) *good* VF £7/10/- ; (d) *almost* EF, *unusually fine for this coin* £9

CH165 **Shilling,** 1645, Curiously-shaped crown, 9 dots in each arch, and C R XII in thin lettering. R. OBS / NEWARKE / 1645. *Nelson,* type *a* *about* F, *RR* 50/-

CH166 — — High crown with simple jewelled band. R as last
almost EF *for issue* ; *large* £6

CH167 — 1646. Richly ornamented crown, thick lettering. R. OBS : / NEWARK / 1646 **bearing hall-mark leopard head in centre of obverse**
pierced for suspension, F/*fair, RRR* £7

CH168 **Ninepence,** 1645. Crown with simple band. R. OBS / NEWARKE / 1645. *Nelson b* *pierced, fair, RRR* 40/-

CH169 — 1646. Richly ornamented crown. R. OBS : / NEWARK / 1646
good F, *plugged* 50/- ; VF, *pierced* 60/- ; VF, *plugged* 90/- ; VF, *RR* £7/10/-

CH170 — — Similar to last, but struck from gilt plate .. .. *nearly* VF, *RRR* £8

CH171 **Sixpence,** 1646
a really good F, *pierced, RR* 62/6

CH172 — 1646. Struck from gilt plate, and **with hallmark leopard head on reverse** M, *RRRR* £9

PONTEFRACT BESIEGED.

CH173 **Shilling,** 1648. Crown over C R, around, DVM : SPIRO : SPERO, all within beaded circle. R. View of castle gateway, OBS to l., XII to r., 1648 below ; struck on lozenge-shaped flan *fair/good* F, *RR* £7

CH174 — — Struck on behalf of Charles II after the death of Charles I. CAROLVS : SECVNDVS : 1648 ; view of castle gate with three towers from centre of which flies flag dividing P C ; cannon protrudes from right-hand tower, OBS to l. R. DVM : SPIRO : SPERO, crown over C · R, struck on octagonal flan .. .. .. VF, *R* £15

CH175 — — CAROL : II : D : G : MAG : B · F · ET · H : REX crown over HANC : DE / VS / DEDIT / 1648. R. Castle gate, etc. POST : MORTEM : PATRIS : PRO : FILIO
(a) VF, *pierced for suspension* £9 ; (b) *good* F £10 ; (c) *nearly* VF, *large,* R £13/10/-

SAXON AND EARLY ENGLISH SILVER COINS.

All silver pennies unless otherwise stated.

7000 **KENT, Cuthred,** 801-807. CVDR · ED R · EX, cross with wedges in angles. R. PE / RHE / ARD in angles of tribach moline. *Ex Grantley coll.*
chip in edge, otherwise VF, *RRR* £18

7001 **ARCHBISHOPS OF CANTERBURY, Ceolnoth,** 833-870. CIALNOD ARC, facing bust with tonsured hd. R. Mono-

gram of Canterbury, VVHERE MONETA. *Ex Ryan coll.* .. .. VF, *RR* £16

7002 — — Similar, but cruder style *slightly chipped*, F £5

7003 **MERCIA, Coenwulf,** 796-822. CO · ENVL : F REX, M in centre. R. D / VD / A in angles of tribrach moline. *Br.* Group I. *Ex Raynes coll.* .. .. .. *chipped and slight crack in flan*, VF, *RR* £11

7004 **Berhtwulf,** 839-852. Diad. bust r. R. Cross-crosslet with pellet-in-circle centre, DENEHEAH M. *Ex Rashleigh, Carlyon-Britton, Bruun and Ryan colls.* *nearly* VF, *RRR* £30

7005 **Burgred,** 852-874. Crude diad. bust r. R. Moneyer's name between lunettes, EADLVLF MON ETA. *Br. type a* .. EF 50/-

7006 — Type C, broken lunettes, EADVLF MON ETA .. .. *nearly* VF 40/-

7007 **EAST ANGLIA, Aethelstan I,** 825-840. Cross with wedges in angles. R. Similar, EADGAR MONE. *Ex Lord Grantley and Ryan colls.* .. .. VF, *RR* £12

7008 **Aethelweard,** 840-865. EDEL · P · . · ARD REX, A and 3 pellets. R. Cross and pellets, DVDDA · MONE. *Ex Brice, Rashleigh, Carlyon-Britton and Ryan colls.* *edge a little irregular, good* F, *RR* £14

7009 **VIKINGS OF YORK, Cnut,** *c.* 890. Name around patriarchal cross. R. Small cross and two pellets, EB · . · IAR · : · ICE : · I · : VF 35/-

7010 — Similar, but CVN · . · NET · . · TI on *rev.* .. .. .. *good* VF 20/-

7011 **WESSEX, Aethelwulf,** 838-858. Diad. bust r. R. Moneyer's name in limbs and angles of voided cross, TORHTVLF MO N E T A *chipped*, VF, *R* £5

7012 **Alfred,** 871-900. *London penny.* ÆLFR ED REX. Diad. bust r. R. London monogram, TILEVINE MONETA. *An outstanding portrait piece for this period; ex Hazeldine and Ryan colls.* .. .. EF, *RRR* £20

7013 **Edward the Elder,** 900-925. *Canterbury type.* Floral ornament of crosses moline and pommée. R. Moneyer's name VVLFHE ARDM—O in two lines divided by central ornament, two annulets and pellet, triangle top and bottom. *A very rare type* (*Br.* 2). *ex Dr. Philip Nelson coll.* *slight chip in edge, otherwise* VF £35

7014 — *Br.* type 13. Small cross. R. Moneyer's name EADM VND M—O in two lines, crosses between *slight double-striking on rev., good* F 70/-

7015 **Aethelstan,** 925-939. *Br.* type 5, *Chester.* ÆDELSTAN REX TO BRTI, small cross. R. Small cross, DEORVLF M—O LEGECFI + *good* VF £7

7016 **ALL ENGLAND, Eadgar,** 959-975. *Br.* type 4. EADGAR · . · REX · T · , small cross. R. Small cross, FASTOL · F · . · MON *chipped*, F 22/6

7017 **Aethelred II,** 979-1016, *Br.* type 2, *London*, diad. bust r. R. Hand of Providence, ÆLFPINE M—O LVND. *nearly* VF 26/-

7018 — *Ipswich*, PALTFERD M—O GIP F/*good* F 25/-

7019 *Br.* type 3, *Exeter*, bust l. with sceptre. R. CRVX in angles of cross, ÆLFSTA M—O EAXE .. .. EF 32/6

7020 — *Lincoln*, COLGRIM M—O LIN F/*good* F 20/-

7021 — *Winchester*, ALFPOLD M—O PIN VF 20/-

7022 *Br.* type 4, *London*, helmeted and cuir. bust l. R. Decorated cross, LEOFPOLD M'O LVND .. .. .. *good* VF 30/-

7023 *Br.* type 5, *Exeter*, dr. bust l. R. Long cross, PVLFSIGE M'O EAXE *good* F 15/-

7024 — *Lincoln*, PVLFRIC MΩO LNC EF 28/-

7025 — *London*, LEOFRIC M'O LVND *nearly* EF 24/-

7026 *Br.* (late) type 1, *London*, diad. and dr. bust l. R. Small cross, ÆDEL · PINE Ω · & · ON LVN : *nearly* VF/*good* VF 20/-

7027 — *Winchester*, ORDBRIHT ON PINCS · VF 28/-

7028 — *York*, SVM · RLEDI M—O EOF : VF 27/6

7029 **Cnut,** 1016-35, *Br.* type 3, *Norwich*, helmeted bust l. R. HATAMAN ON NOR *good* F/*nearly* VF 30/-

7030 — *York*, ASGOVT M—O EOFR VF 32/6

7031 *Br.* type 4, *London*, diad. bust l. R. Short voided cross, GODINC ON LVNDE VF 30/-

7032 **Edward the Confessor,** 1042-66, *Br.* type 4/5, *York*, annulet in one quarter of *rev.*, ARNGRIM ON EOFR *nearly* EF 45/-

7032A *Br.* type 7 **overstruck** on coin of type 6. *Inscription uncertain due to the overstriking.* *a fragment broken off*, F, *RR* 25/-

7033 *Br.* type 6, *Winchester*, helmeted bust r., LIF INC ON PINCEST : .. .. VF 20/-

7034 — *York*, annulet in one quarter of *rev.*, SPARTCOL ON EOFER EF/VF 30/-

7035 *Br. type* 9, *London*, small facing bust. R. Small cross, EDPINE ON LVNDE EF 26/-

7036 *Br.* type 10, *York*, crowned bust l., annulet in one quarter of *rev.*, ÐORCIL ON EOFRPIC .. .. VF 25/-

7037 **William I,** 1066-87, type II (" bonnet " issue), *York*, AV DOLF ON EOFE VF/F 70/-

7038 Type V (" two star " issue), *London*, BRIHTRIC ON LV *nearly* VF/*good* VF 65/-

7039 Type VIII (" PAXS " issue), *Exeter*, LIFPINE ON IEXEC *nearly* VF/VF 32/6

7040 — *Winchester*, LIFPOLD ON PIN *nearly* VF 26/-

7041 **William II,** 1087-1100, type II (cross in quatrefoil), *Wallingford*, COLBRN ON PAL *nearly* EF *for issue*, *RR* £14

7042 **Henry II,** 1154-89, cross-and-crosslet ("Tealby") issue, C², *Newcastle*, PILL[AM] : ON : NE : . . . . F *for issue* 20/–
7043 Short cross issue Ib, *London*, PIERES · M · ON · LVN . . . . *good* VF 20/–
7044 — *York*, ISAC · ON · EVERW VF 25/–
7045 **Richard I and John,** (with name of Henry), short cross type IV, *Canterbury*, VLARD · ON · CAN EF/*good* VF *for this type* 22/6
7046 **John,** 1199-1216 (with name of Henry), short cross Vb, *London*, BENEIT · ON · LVND VF 10/–
7047 — *Canterbury*, SAMUEL · ON · CAN *nearly* VF 8/6
7048 Type Vc, *London*, RAVF · ON · LVND *nearly* EF 10/–
7049 — *Canterbury*, ARNAVD · ON · CA *nearly* VF 9/–
7050 **Henry III,** short cross VI, *London*, ILGER · ON · LVNDE . . F/VF 7/–
7051 Type VII, *London*, LEDVLF ON LVND F 4/–
7052 — *Canterbury*, IOAN ON CANT *nearly* VF 5/–
7053 Long cross type Ib, *London*, hENRICVS REX · ANG. R. LIE TERCI' . LON *nearly* VF 37/6
7054 Type IIIb, *Newcastle*, hENRI ON NEWEC *nearly* VF 18/6
7055 Type Vb, *Canterbury* *nearly* VF 5/–

ENGLISH MILLED SILVER COINS.

Crowns.

7056, **Charles II,** second bust, 1671 *fair/nearly* F 18/6
7057 — Third bust, 1673 *fair*/F 20/–
7058 **James II,** second bust, 1688 F 30/–
7059 **George III,** 1819, LIX . . EF 32/6
7060 — Bank of England *six shillings token*, 1804 *good* F 27/6 ; *proof*, *brilliant*, FDC 60/–
7061 **Victoria,** young head, 1845 VF/*good* VF 27/6
7062 — 1847 EF/*good* EF, *toned* 60/–
7063 Jubilee issue, 1887 *nearly* EF 12/–
7064 — 1890 . . *a really good* VF 11/6
7065 — 1892 . . . . *about* EF 13/6
7066 Old head, 1893, LVI *a really good* VF 21/– ; *nearly* EF 27/6
7067 — 1897, LXI *a really good* VF 25/–

Double Florins.

7068 **Victoria,** Jubilee issue, 1887 (Roman I) EF 13/6
7069 — 1889 . . . . . EF 15/–

Halfcrowns.

7070 **Edward VI,** 1551, *mm.* y. EDWARD'. · VI : D'. G'. AGL'. · FRAN'. Z : hIB'. REX · y : King on horseback r. · 1551 · below. R. · POSVI / DEVM : A / DIVTOR / E'. MEV'. y : *fair* 35/–
7071 **Charles II,** fourth bust, 1673 *about* F 18/–
7072 **James II,** second bust, **1687** *a really good* F, *RR* 60/–
7073 — 1688 . . *fair, scarce* 16/–
7074 **William and Mary,** first issue, 1689, caul and interior frosted, pearls *a really good* F 11/6
7075 — — no frosting, pearls *fair/nearly* VF 6/–
7076 **Anne,** before Union, 1703, VIGO *fair* 8/6
7077 After Union, 1707, plain *good* F 12/6
7078 — 1707E (*Edinburgh*) . . *fair* 6/–
7079 — 1708, plain . . . . F 9/–
7080 **George II,** old head, 1746, LIMA *good* F 7/6
7081 **George III,** first "bull head" issue, 1817 . . . . . EF 15/–
7082 Second issue, 1817 VF 7/6 ; EF 14/–
7083 **George IV,** first issue, 1821 VF 8/6 ; EF 17/6
7084 Second issue, 1823 F/*good* F 7/–
7085 Third issue, 1825 *nearly* EF/EF 14/6
7086 **William IV,** 1836 *good* F 7/–
7087 **Victoria,** young head A¹, 1839, *proof*, plain edge *brilliant*, FDC, *scarce* 55/–
7088 — Type A⁴, 1874 *nearly* EF 10/6
7089 — — 1884 *about* EF, *scarce* 13/6
7090 — — 1886 . . . . EF, *scarce* 14/–
7091 Jubilee issue, 1887 . . . . EF 6/–
7092 — 1889 . . . . *good* EF 8/6
7093 — 1890 . . . . EF, *R* 10/6
7094 — 1891 . . . . EF, *R* 10/–
7095 Old head, 1893 . . . . EF 9/–
7096 — 1894 . . . . . EF 9/–
7097 — 1897 . . . . . EF 9/–
7098 — 1901 *obv. slightly scratched*, *nearly* EF 7/–
7099 **Edward VII,** 1902, *proof* *a really good* VF/*nearly* EF 11/–

Florins.

7100 **Victoria,** "Godless" issue, 1848, *proof*, plain edge *brilliant*, FDC, *scarce* 95/–
7101 "Gothic" issue, type B², 1867, die 7 VF, *RR* 21/–
7102 — Type B³, 1872, die 15 . . EF 13/6
7103 — Type B⁸, 1883 *nearly* EF 10/–
7104 — — 1884 . . . . . EF 12/–
7105 — — 1885 . . . . . EF 12/–
7106 Jubilee issue, 1887 *nearly* EF 4/– ; FDC, *unusually fine* 7/6
7107 — 1890 *about* EF, *R* 12/6
7108 Old head, 1893 . . . . EF 7/6
7109 — 1894 . . . . EF, *scarce* 8/6

Shillings.

7110 **Edward VI,** base " profile " issue, 1550, *mm.* ?. EDWARD '. VI'. D'. G'. etc. His young bust crowned r. R. TIMOR DOMINI FONS VITE MDL (1550). Small oval garnished shield between ER .. .. *fair* 10/6

7111 " Fine " coinage, *mm.* y *nearly* F, *bent* 4/6 ; *a really good* F, *large* 12/-

7112 — *mm.* tun .. .. F/*fair* 7/-

7113 **Philip and Mary,** full titles, undated M 9/-

7114 — 1554 .. VF *for issue* £6

7115 **Elizabeth I,** hammered coinage, *mm.* bell .. .. *fair/nearly* VF 7/6

7116 — *mm.* tun .. .. *about* F 10/-

7117 — *mm.* 1 (1601) .. F, *scarce* 15/-

7118 **Commonwealth,** 1653, *mm.* sun *fair* 8/- ; *almost* VF 26/-

7119 **Charles II,** milled coinage, **third bust,** 1675 .. .. .. F, *RRR* 60/-

7120 **Anne,** after Union, third bust, 1708, plumes .. .. .. F 8/-

7121 **George I,** first bust, 1723, SSC (*South Sea Co.*) .. .. .. F 3/6

7122 **George II,** young head, 1736, r. & p. F 6/-

7123 Old head, 1743, roses .. F 3/6

7124 — 1747, roses *good* F, *scarce* 6/-

7125 **George III,** 1787, semée of hearts *good* EF 4/-

7126 — no semée .. *nearly* VF 2/-

7127 Last issue, 1816 .. .. EF 4/-

7128 **George IV,** first issue, 1821 *a really good* VF 10/-

7129 Third issue, 1825 .. .. EF 9/-

7130 **William IV,** 1834, 1835 *each, a really good* VF 10/-

7131 **Victoria,** young head, type A[1], 1839, *proof* .. *brilliant,* FDC, *R* 32/6

7132 — Type A[6], 1874 .. .. EF 7/6

7133 — — 1876 .. .. *nearly* EF 7/-

7134 — — 1877 .. .. .. EF 7/6

7135 — Type A[7], 1879, 1880, 1883, 1884, 1886 .. .. .. *each,* EF 6/-

7136 Jubilee issue, small head, 1887 EF 2/6

7137 — Large head, 1889, 1890, 1891, 1892 *each,* EF 9/-

7138 Old head, 1893, 1894, 1896, 1901 *each,* EF 5/-

Sixpences.

7139 **Edward VI,** *mm.* tun (portrait as on *mm.* y coins) .. .. .. F 15/-

7140 — *mm.* y **on reverse only** *good* F, *RR* 35/-

7141 **Elizabeth I,** hammered coinage :—(a) 1564, pheon, *fair*/F 7/6 ; (b) 1574, acorn, F 6/- ; (c) 1592, hand, *good* F 8/-

7142 Milled coinage, large ornate bust, small rose, 1562 .. .. *fair*/F 7/6

7143 **James II,** 1687 .. .. F 17/-

7144 **Anne,** before Union, 1703, VIGO F 6/-

7145 **George I,** 1723, SSC *about* F/F 6/-

7146 **George II,** young head, 1731, r. & p. F 5/-

7147 **George III,** 1787, hearts *good* F/VF 2/-

7148 Last issue, 1816 *good* EF 4/-

7149 **George IV,** second issue, 1825 EF 11/6

7150 **Victoria,** young head, Type A[1], 1839 EF, *scarce* 6/6

7151 — — *proof* .. FDC 21/-

7152 — Type A[4], 1877 VF, *R* 7/-

7153 — Type A[5], 1880, 1883, 1884, 1886 *each,* EF 4/6

7154 Jubilee issue, withdrawn type, 1887 EF 2/6

7155 Second type, 1889, 1890, 1891, 1892 *each,* EF 3/6

7156 *Pattern,* by Spink & Son, in aluminium. VICTORIA · BY · THE · GRACE · OF · GOD · QUEEN · OF · GREAT · BRITAIN · EMP : OF · INDIA around bust l. R. SIXPENCE MDCCCLXXXVIII . below, SPINK & SON with emblems ; Royal Arms with supporters. Plain edge. 20 struck, weight 12 grains FDC, *RRR* 95/-

7157 — A similar coin struck in **tin** ; plain edge ; only 9 struck, weight 32 grs. FDC, *RRRR* £6

7158 Old head, 1893, 1894, 1897, 1898, 1901 *each,* EF 4/-

IRISH COPPER COINS.

IR470 **Charles II.** *St. Patrick's halfpenny. Obv.* King David kneeling playing a harp. R. St. Patrick standing with group of people. Brass plug on *obv.* .. F 25/-

IR471 — *farthing.* Similar, but smaller size. Brass plug on *obv.* .. *good* F/F 12/6

IR472 — — Without plug .. F 10/-

IR473 — *halfpenny,* 1680. Bust of king to r. R. Crowned harp .. *good* F/F 5/6

IR474 — — 1682 .. *nearly* VF 8/6

IR475 — — 1684 .. *RR, good* F 37/6

IR476 **James II,** *halfpenny,* 1685. Bust of king to l. R. Crowned harp *nearly* VF 8/-

IR477 — 1686 .. .. F/*good* F 6/-

IR478 — 1688 .. .. *good* F 8/-

IR479 Money of Necessity, " *Gunmoney* " *crown.* Equestrian figure of king to l. IAC . II . DEI . GRA . etc. R. Cruciform shields ANO / DOM / 16 / 90 in angles. Overstruck on large halfcrown. Obv. reads RIX *R,* F 15/-

IR480 — *large halfcrown.* March 1689. Bust of king to l. IACOBUS . II . DEI . GRATIA . R. Two sceptres in saltire through a crown. XXX .. .. *good* VF 10/6

IR481 — *small halfcrown.* XXX. May 1690 VF 6/–

IR482 — *large shilling.* March 1690 VF 7/6

IR483 — *small shilling.* May 1690 *nearly* VF 5/–

IR484 — *sixpence.* Jan. 1689 *good* VF 10/6

IR485 Pewter Money, *halfpenny*, 1690. Bust of king to l. IACOBUS . II . DEI . GRATIA. R. Crowned harp . MAG . BR . etc. around. With copper plug .. *RR, good* F/F 45/–

IR486 " Limerick " Money, *halfpenny.* Bust of king to l. IACOBUS . II . DEI . GRATIA . R. Female seated l. with harp. HIBERNIA . 1691 *good* VF *for issue* 16/–

IR487 — *farthing.* 1691 *nearly* VF 12/6

IR488 **William and Mary,** *halfpenny.* 1692. Busts to r. R. Crowned harp *nearly* VF 10/–

IR489 — 1693 .. VF/*nearly* VF 11/–

IR490 — 1694 .. .. .. VF 12/6

IR491 **William III,** *halfpenny.* 1696. Bust to r. R. Crowned harp F/*good* F 10/–

IR492 **George I.** " Woods " Coinage, *halfpenny.* First issue. 1722. Bust of king to r. GEORGIUS . DEI . GRATIA . REX. R. Female seated l. harp in front .. .. VF 20/–

IR493 — — Second issue. 1722. R. Female seated l., harp behind *scarce, nearly* EF 25/–

IR494 — — — 1723 *good* F 7/– ; EF 15/–

IR495 — — — 1724 *scarce, nearly* EF 22/6

IR496 — *farthing.* Second issue. 1723. EF 10/–

IR497 — Pattern *halfpenny.* 1722. Bust of king to r. GEORGIUS . D . G . REX . R. Female seated holding harp in both hands, mass of rocks behind her. . HIBERNIA . *pierced, nearly* F, *RRR* 70/–

IR498 **George II.** *Halfpenny.* Young head. 1736. Bust of king to l. GEORGIUS . II . REX. R. Crowned harp. HIBERNIA. *Proof* FDC 35/–

IR499 — — 1737 EF/*good* EF 16/–

IR500 — Slightly older features. 1750 *nearly* VF 5/–

IR501 — — 1751 .. .. VF 6/6

IR502 — Old head. 1760 *good* VF 8/6

IR503 — *farthing.* Young head. 1737. *proof,* FDC 22/6

IR504 — — 1738 .. *good* F 3/6

IR505 — — 1744 .. .. VF 5/–

IR506 — Old head. 1760 .. EF 8/–

IR507 " Voce Populi " Coinage, *halfpenny.* 1760. Bust to r. VOCE + POPULI. R. Hibernia seated l. HIBERNIA + + , date in ex. Nelson Type III .. *good* VF 15/–

IR508 — — Type IV, No. 10. Two rosettes after HIBERNIA .. .. *RRR,* F 52/6

IR509 — — Type V, No. 12. P before bust. R. of very crude style .. *good* F 7/–

IR510 — *farthing.* 1760. Bust to r. VOCE POPULI. R. Hibernia seated l. HIBERNIA, date in ex. .. *RR,* F/*good* F 37/6

IR511 **George III.** First Coinage, *halfpenny.* Head with short hair, bust facing r. R. Crowned harp. 1766 .. .. VF 7/6

IR512 — — 1769 .. .. VF 7/–

IR513 — — Head with long hair. R. As above. 1775 *proof,* FDC 32/6

IR514 — — 1781 .. *good* EF 10/6

IR515 — — 1782 .. .. EF 8/6

IR516 — — 1782 *proof, almost* FDC 27/6

IR517 Second Coinage, *penny.* 1805. Dr. bust of king to r. Crowned harp EF 8/6

IR518 — — *proof,* copper, grained edge FDC 17/6

IR519 — — — bronzed FDC 15/–

IR522 — *halfpenny.* 1805 .. EF 3/6

IR523 — — *proof,* copper, grained edge FDC 15/–

IR524 — — — bronzed FDC 10/–

IR526 — *farthing.* 1806 .. EF 2/6

IR527 — — *proof,* copper, grained edge FDC 10/6

IR528 — — — bronzed FDC 7/6

IR529 — — — gilt .. FDC 12/6

IR530 — — — bronzed, plain edge, possibly a restrike .. *almost* FDC 7/6

IR531 — — — gilt, plain edge FDC 12/6

IR532 **George IV.** *Penny.* 1822. Bust of king to l. R. Crowned harp VF 5/– ; *good* EF 9/–

IR533 — *proof* .. .. FDC 25/–

IR534 — 1823 .. .. .. EF 7/6

IR535 — *halfpenny.* 1822 .. EF 4/–

IR536 — — *proof* .. FDC 17/6

IR537 — 1823 .. *nearly* FDC 6/6

IR538 — — *proof* FDC/*practically* FDC 16/–

IR539 **Irish Free State.** Saorstat Eireann, Æ *halfcrown.* 1934. *Obv.* Harp. R. Horse EF 6/6

IR540 — Æ *florin.* 1928. R. Salmon EF 5/–

IR541 — Æ *shilling.* 1928. R. Bull EF 2/6

IR542 — nickel *sixpence.* 1928. R. Greyhound .. .. EF 1/6

IR543 — nickel *threepence.* 1928. R. Rabbit .. .. EF 1/–

IR544 — Æ *penny.* R. Turkey EF 6d

IR545 — Æ *halfpenny.* R. Sow and litter EF 6d

IR546 — *proof* set 2/6—¼d, 1928, in original green leather case .. FDC 45/-

IR547 — — Similar set, 1928, in official cardboard box .. .. FDC 35/-

IR548 **Eire.** Ni. *sixpence.* 1940. R. Greyhound .. .. EF 1/-

IR549 — Set, mixed dates 1942 and 46, in original green cardboard box, *unc.* 14/6

COMMONWEALTH AND FOREIGN CROWNS AND TALERS.

C599 **BRITISH GUIANA,** George III, *three guilders*, 1816. Laur. and cuir. bust r. R. Crowned 3 in oak branches. *Atkins* 8; *W.R.* 8 .. .. *RR, about* VF 55/-

C600 **CANADA,** George VI, *dollar*, 1939. Head l. R. The Houses of Parliament in Ottawa .. .. EF 22/6

C601 Elizabeth II, *dollar*, 1953. Her bust l. R. Two men in canoe EF 15/-; FDC 18/6

C602 **CYPRUS,** George V, *forty-five piastres*, 1928. His crowned bust l. R. Two lions passant *good* VF 55/- (*cleaned*); EF 75/-

C603 — *proof* .. *brilliant* £7/10/-

C604 **DENMARK,** Christian IV, *speciedaler*, 1626. REGNAT FIRMAT PIETAS, his crowned bust r., CHRISTIANUS IIII on plate below between N S—trefoil. R. Crowned shield on cross in circle of arms. *Schou.* 4 *RR, good* VF £8/10/-

C605 Christian V, *mining speciedaler*, 1696, *Kongsberg.* CHRISTIAN . V . D . G . etc. Draped bust r. R. Crowned shield, 16 HC — M 96 crossed hammers below; DANNER KONGIS NORDSKE, etc. on edge. *Schou.* 14; *hair on obv. slightly rubbed* *RR, good* VF £5/15/-

C606 Christian IX, 2 *rigsdaler*, 1864, on his accession. His head r. R. Laur. head of the late king Frederik VII r. *Schou.* 1; *Dav.* 78 .. .. *good* EF 45/-

C607 **FRANCE,** Louis XIII, *louis d'argent*, 1643, by Varin. LVDOVVICVS XIII D . G . FR . ET NAV . REX, his cuir. bust with long hair r. R. SIT NOMEN DOMINI . BENEDICTVM, crowned shield of France. *Ciani* 1664 *sharp, and very interesting portrait, good* EF, *RRR* £22

C608 Louis XIV, *écu du Parlement*, 1673, *Rennes.* Cuir. bust with lace jabot or cravat and long hair. R. Similar. *Ci.*— *RRR, slight cracks in obv dies, rare date, pleasing portrait, good* EF £14

This écu has great similarity with *Ciani* 1873 (écu du Parlement 1679-83) but there are slight differences in the design of the obverse, so it may be assumed that this die soon cracked and another of somewhat similar design was made later.

C609 Louis XV, *écu Vertugadin*, 1718, *Rennes.* Draped boy's bust r. R. Crowned shield, 9 below. *Ci.* 2095 *RR, good* EF/EF 85/-

C610 — *écu à la vieille tête*, 1772, *Limoges.* Laur. and draped old bust l. R. Crowned shield in branches. *Ci.* 2139 *good* VF 45/-

C611 Louis XVI, *écu*, 1788, *Bayonne.* His unif. bust l. R. Similar *practically* FDC 50/-

C612 — *écu constitutionel*, 1792A. Old head l. R. Angel writing on scroll *uncirc.* 38/-

C613 First Republic, 5 *francs*, year 8 (1800/01)Q, *Perpignan.* Value. R. Three figures standing. *Dav.* 81 .. .. EF 21/-

C614 — 5 *francs*, year 10 (1802/03) L, *Bayonne.* Similar EF/*good* VF 18/6

C615 Napoleon Consul, 5 *francs*, year 12 (1804), Q, *Perpignan*, by Tiolier. R. His head r. R. Value. *Dav.* 82 *good* VF 37/6

C616 — emperor, 5 *francs*, year 13 (1805)A, by Brenet. Head of other design. *Dav.* 83 *good* VF 35/-

C617 Louis XVIII, first restoration, *pièce de* 5 *francs*, 1814K, *Bordeaux.* His unif. bust l. R. Crowned shield. *Dav.* 86 *R*, EF 32/6

C618 Napoleon I, hundred days, 5 *francs*, 1815W, *Lille.* Laur. bust r. R. Value. *Only* 21,000 *struck.* *Dav.* 85 *RR, good* VF 85/-

C619 Charles X, 5 *francs*, 1830A (last year). Head l. *Dav.* 88 *good* VF/EF 22/6

C620 Henri V, Duc de Bordeaux, Pretender, 5 *francs*, 1831. His young bust l. R. Value .. .. *RR, good* EF 85/-

C621 Louis Philippe, *provisory* 5 *francs*, 1831D, *Lyons.* Bare head r. R. Value in wreath. *Dav.* 89 *scarce, good* VF 22/6

C622 — 5 *francs*, 1834A. Laur. head. *Dav.* 91 .. .. .. *good* EF 20/-

C623 Second Republic, 5 *francs*, 1849A. Head of Ceres. R. Value. *Dav.* 93 *uncirc.* 25/-

C624 Louis Napoleon, President, 1852, 5 *francs.* His head l. R. Value in wreath. *Dav.* 94 .. *scarce, uncirc.* 32/6

C625 Napoleon III, 5 *francs*, 1855A. Bare head. R. Shield on crowned mantle. *Dav.* 95 .. .. *R*, EF 45/-

C626 — 5 *francs*, 1870, *Strasbourg* (last date). Laur. head l. *Dav.* 96 .. EF 15/-

C627 Third Republic, 5 *francs*, 1873A, 1876K. Similar to C613 *each*, EF 12/6

C628 Pattern 5 *francs*, 1874, Satirical. Head of Mac-Mahon l. R. Crowned imperial shield, also jesuit's hat above, DIEU PUNIT LA FRANCE on edge. *V.G.* 3857 *brilliant* £5

C629 20 *francs*, 1933. Head of Liberty r. R. Value. *Dav.* 98 .. .. EF 11/6

C630 **GERMANY, Bavaria,** Maximilian I, Elector, *broad and thick double taler*, 1626. Crowned shield between supporters. R. CLYPEVS OMNIBVS INTE SPERANTIBVS. The Virgin with Child enthroned on clouds in rays *slight flaw in edge, good* EF £6

C631 Ferdinand Maria, *taler*, 1657, *Vicariate* (after death of emperor Ferdinand III). O . MARIA . ORA PRO . NOBIS the Elector, kneeling before the Virgin, offering orb, crowned shield of Bavaria in field. R. D . G . FERDINANDVS MARIA : SVP : ET INF, etc. in field. *Witt.* 1398 ; *S.-R.* 354 ; *Reimm.* 3148 *RRR, good* EF £6/15/–

C632 Maximilian Emanuel, *taler*, 1694. Cuir. bust with long wig r. R. The Virgin with Child on clouds, behind shield of Bavaria. EF/*good* EF 40/–

C633 Maximilian Joseph, *taler*, 1761. Bust r. R. Crowned shield of Bavaria between supporters .. *good* VF/EF 18/6

C634 Carl Theodor, *taler*, 1779 (the year he became also elector of Bavaria). Cuir. bust r. R. The Virgin on clouds *good* VF/EF 18/6

C635 **Eichstätt,** bishopric, Sede Vacante, 1757, by Oexlein, *taler*. Shield of the bishopric in circle of the shields of the chapter, value below. R. Shield with crozier between St. Willibald and St. Walburga. *S.-R.* 4194 ; *Gebh.* 92 .. FDC 47/6

C636 **Freising,** Jos. Conr. v. Schroffenberg, 1790-1803, *taler*, undated, by Körnlein. Bust r. R. Shield on crowned mantle. *S.-R.* 4203 *R, good* EF/FDC 75/–

C637 **Hamburg,** *taler*, undated, 1606-19). DA PACEM, etc. Shield of the city with richly ornate helmet and crest. R. Nativity and Adoration of the Magi, the whole in wreath. *Gaed.* 1528 *RR, brilliant*, FDC £6/10/–

C638 — *taler*, 1621. The castle with three towers, date between. R. Crowned double eagle with 32 in orb ; title of emperor Ferdinand II .. .. *good* VF 27/–

C639 **Lüneburg,** city, *taler*, 1562. MONETA . CIVITATIS LVNENBVRG, castle with three towers, the shield of the city (lion) in gate. R. VISITAVIT . NOS . ORIENS . EX . ALTO 1562 crescent with human face r. *Kny.* 5047 *var.* .. .. *RR*, VF 70/–

C640 — *taler*, 1636. MONETA NOVA. CIVIT . LUNEBURGENSIS, *mm.* rider, castle with the shield of the city in gate. R. FERDINANDUS II, etc. ending 1636, crowned double eagle with 32 in orb. *This date missing in all big collections* *RRR, nearly* VF £5/15/–

C641 **Mansfeld-Vorderort,** Hoyer VI, Gebh. VII, Alb. II and Phil. II, 1536-40, *taler*, undated. Helmeted shield. R. St. George on horseback l., killing the dragon. *v. Hagen* 17 .. VF/*good* F 27/6

C642 — **Bornstätt,** Karl Adam, *broad taler*, 1657. Quartered shield, two helmets above, between 16 — 57. St. George on horseback r., killing the dragon. *Stentzel*, p. 22, 18 ; *v. H.* 33, 3 .. .. *slight striking flaw on edge* ; *for this coin good* EF 85/–

C643 **Oettingen,** Karl Wolfg. Ludwig and Martin, *taler*, 1541. Shield under helmet and crest with bulldog between 15 — 41. R. Double eagle, title of Emperor Charles V in circle .. .. .. *scarce*, VF 35/–

C644 **Saxony, Ernestine Line,** Friedrich, Johann and Georg, 1507-25, "*Klappmützen*" *taler*, undated, *T. Buchholz*. Bust of the Elector Friedrich with electoral vestments and crown, shouldering sword. R. The two busts in flat caps facing each other. *R, good* VF/EF 75/–

C645 Johann d. Beständige (the Constant), 1530-32, *taler*, undated X, *Schmeeberg*. IOANNE—S : ELEC—TOR . FI—ERI . FE . X, his bust l., shouldering sword. R. Quartered shield ; four small shields in circle on *obv.* and *rev.* *Dassd.* 82 *RR, nearly* VF/*good* VF 75/–

C646 Joh. Friedrich and Georg, so-called "pasternoster" *taler*, 1536, *Buchholz*. Bust of the Elector r. with electoral vestments, shouldering sword. R. Bust of George with fur coat and collar of the Golden Fleece, date with reversed 6 in circle. *Engelh.* 125 .. *R, good* VF/EF 65/–

C647 **Saxe-Weimar,** Johann Ernst and his seven brothers, *taler*, 1609. The four children's busts facing on *obv.* and *rev.* VF 27/6

C648 — — *taler*, 1613. Similar bust the busts of the boys on *obv.* and *rev.* *scarce, good* VF 42/–

C649 — — *taler*, 1619. Three quarter bust of Joh. Ernst, the seven busts of his brothers around. R. Shield, six helmets above between 16 — 19 *R, good* VF/EF 47/6

C650 — **Eisenach,** Ernst August Constantin, *taler* (1756) on his accession. His cuir. young bust r. R. IVSTITIA ET CLEMENTIA shield of Saxony in circle of small shields. *Dassd.* 2236 *RR, practically* FDC £7

C651 **Trier,** archbishop Clement Wenzel (son of August III of Poland), *taler*, 1773. His bust r. R. Crowned shield of Trier, with shield of Poland in centre, on sword and crozier. *Hutten-Czapski* 4760 ; *S.-R.* 4054 .. *brilliant*, FDC £5/10/–

C652 **Werden and Helmstätt,** abbot Anselm of Sonius, *taler*, 1765. ANSELMUS, etc. Quartered shield, two ornate helmets above. R. View of the abbey in hilly countryside (Hercynia), bust of St. Ludger above .. .. .. *good* EF 95/–

C653 **ITALY, Naples,** Ferdinand and Maria Carolina, *piastra*, 1772, commem. birth of a daughter. Conj. busts r. R. Queen seated, with infant on her lap, in front of bay of Naples and Vesuvius *scarce, good* F/VF 28/–

C654 — Republic, *piastra* of 12 *carlini*, 1799. Liberty standing, holding fasces and cap of Liberty. R. CAR / LINI / DODICI in wreath. *Cag.*, type A. *W.R.* 1
R, VF/*good* VF 42/-

C655 Joachim Murat, *piastra* of 12 *carlini*, 1810. Bare head l. R. Value in wreath. *Cag.* A.9; *W.R.* 15; *Dav.* 166
pleasing portrait, good VF 42/-

C656 Francis II, *piastra* of 120 *grani*, 1825. Head r. R. Crowned shield. *W.R.* 38; *Dav.* 171 .. .. *uncirc.* 37/6

C657 **Ragusa** (Dubrovnik), *broad ducato*, 1736. Crowned oval shield. R Bust of St. Blasius, holding the model of the cathedral of the city .. *RR*, VF/*good* VF 55/-

C658 **Tuscany,** Ferdinand II of Medici, *piastra*, 1628, *Florence*. His cuir. bust r. with big ruff, 16 — 28 below. R. St. John the Baptist standing facing
interesting portrait, RR, good VF £5/10/-

C659 Cosimo III, *tollero*, 1707, *Livorno*. Draped and cuir. bust r. R. The gate of the harbour of Leghorn *pleasing* EF 70/-

C660 Peter Leopold, *francescone*, 1790, *Pisa* (year of his coronation as Leopold II). His cuir. bust r., unicorn below. R. Crowned shield .. .. .. *slight scratch in field, very nicely toned, good* EF 25/-

C661 Ferdinand III, *francescone*, 1798. Head r. R. Similar *good* EF/FDC 45/-

C662 Louis of Bourbon, *francescone*, 1803, *Pisa*. Head r. R. Similar. *W.R.* 1; *Dav.* 151 .. .. EF 32/-

C663 Charles and Marie Luise, *francescone*, 1807. The busts facing each other. R. Similar. *Dav.* 155 VF/*good* VF 25/-

C664 Leopold II, *francescone*, 1841. Younger head r. *W.R.*—; *Dav.* 159 *good* EF 25/-

C665 — *francescone*, 1846. Old head. *W.R.* 19; *Dav.* 160 .. *good* EF 25/-

C666 **NEW ZEALAND,** *crown*, 1949, struck to commem. the visit of George VI. Head l. R. Fern EF 18/-; *good* EF 20/-

C667 **NETHERLANDS, Batenberg** (Guelders), William, 1550-73, *taler*, undated. Helmeted shield. R. Crowned double eagle, title of Charles V of Germany
scarce, about VF 28/-

C668 Hermann Dietrich, *taler*, 1578. MO' NO . ARG . HERM . T . — H . D . etc., knight standing holding shield. R. POSVI . DEVM . ADIVTOREMQVE . TIMEBO crowned lion walking l. *Verkade* 35, 2 *R, good* VF 60/-

C669 **Brabant,** Philip II of Spain, *daalder*, 1557, *Antwerp*. With title king of *England*. PHS . D . G . HISP . ANG Z . REX et. his cuir. bust l., 1557 below. R. Crowned shield on cross of Burgundy between fire-irons
RR, good VF 80/-

C670 Albert and Elizabeth, *ducaton*, 1619, *Antwerp*. Conj. busts r. R. Crowned shield between supporters .. VF 38/-

C671 Philip V of Spain, *ducaton*, 1703, *Antwerp*. Small bust r. with long wig. R. Crowned shield between supporters
R, good VF/EF 50/-

C672 **Holland Province,** *Leicester rijksdaalder*, 1595. Square shield of seven small shields, 1595 above. R. Laur. bust of Leicester, shouldering sword and holding bundle of arrows. *Verk.* 46, 3
RR, EF/*good* VF £5/10/-

C673 — Kingdom. Louis Napoleon, 50 *stuiver*, 1808. His head l. R. Crowned shield. *Dav.* 228 .. *good* EF 35/-

C674 Willem I, 2½ *gilden*, 1840 (year of his death). Head r. R. Crowned shield. *Schulman* 257 (44,376 struck); *W.R.* 16; *Dav.* 234 .. *RR, good* EF 55/-

C675 Willem II, 2½ *gulden*, 1846, *mm.* lis. *Sch.* 512A; *W.R.* 23; *Dav.* 235
R, good EF 35/-

C676 Wilhelmina, 2½ *gulden*, 1931
brilliant proof 22/-

C677 **NORWAY** (see also C605), Christian V, *speciedaler*, 1674. Laur. and cuir. bust r. R. The shield of Norway (lion with arrow) crowned, on cross. *Schou.* 11
RRR, good VF £9/10/-

ORIENTAL COINS.

N.B.—Number after the metal is the size in millimetres. Mgr.=monogram.

ANCIENT PERSIA.

W857 **Parthia,** Mithradates I, 171-138 B.C., *Æ drachm.* Helmeted, small bust , v. long tiny beard. R. 5-line legend, ΕΠΙΦΑΝΟΥΣ *B.M.C.*—(bust) *nearly* EF 21/-

W858 — *Æ drachm.* Similar, but thick beard. *Petr.* iv, 10 .. .. VF 18/6

W859 — *Æ drachm.* Helmeted, large bust, v. long thick beard. R. Similar. *Petr.* iv, 6
EF 25/-

W860 — *Æ drachm.* As previous but variety of bust. *Petr.* iv, 7 .. .. EF 25/-

W861 — *Æ drachm.* Helmeted, small bust, long beard. R. 6-line legend ΕΥΕΡΓΕΤΟΥ. *B.M.C.* viii, 4 *nearly* EF 21/-

W862 Phraates II, 138-128 B.C., *Æ drachm.* Diademed, small head, closed beard. R. 5-line legend ΘΕΟΠΑΤΟΡΟΣ. *B.M.C.* ix, 6
VF 18/6

W863 Mithradates II, 123-88 B.C., *Æ drachm.* Helmeted, horn device, large bust. R. 6-line legend, ΕΥΕΡΓΕΤΟΥ, mgr. **K.** *B.M.C.* xi, 3 .. .. .. EF 21/-

W864 Sinatruces, 77-70 B.C., *Æ drachm.* Helmeted star device, small bust. R. 7-line legend, ΑΥΤΟΚΡΑΤΟΡΟΣ. *B.M.C.* x, 3
F 8/6

W865 Phraates III, 70-57 B.C., Æ *drachm.* Diademed, small bust, close beard. R. 8-line legend, ΒΑΣΙΛΕΩΣ . ΒΑΣΙΛΕΩΝ on top, ΕΥΠΑΤΟΡΟΣ, mgr. *B.M.C.* 25 bust xiii, 8 .. .. .. VF 25/–

W866 — Æ *drachm.* Similar, but large bust. R. 8-line legend, ΒΑΣΙΛΕΟΝΤΟΣ . ΒΑΣΙΛΕΩΝ on top, ΕΥΠΑΤΟΡΟΣ . ΚΑΙ, no mgr. *B.M.C.*— (mgr.) xiii, 8 VF 30/–

W867 Orodes I, 57-37 B.C., Æ *drachm.* Crescent behind, small bust, close rounded beard. R. Mgr. *B.M.C.* 98, Pl. xvi, 1 EF/VF 15/–

W868 — Æ *drachm.* Similar but large bust. R. Mgr. Π. *B.M.C.*—, bust xvi, 5 VF 12/6

W869 Phraates IV, 37-2 B.C., Æ *drachm.* Eagle behind head, small bust, trimmed beard. R. Mgr. *B.M.C.* 71, Pl. xx, 7 VF/F 8/6

W870 — Æ *drachm.* Similar, but large bust. R. Mgr. *B.M.C.* 84, Pl. xx, 9 (*var.*) F/*fair* 5/6

W871 — Æ *drachm.* As previous, but of base silver, mgr. *B.M.C.* 84, Pl. xx, 9 F 7/6

W872 — Æ *drachm.* Star with crescent in front, eagle behind. Small bust, pointed beard, mgr. *B.M.C.* 219, Pl. xxii, 10 VF 10/6

W873 **Persis,** Kapat. Early 3rd c. A.D., Æ ½ *drachm.* Bust l., wearing tiara, long beard. R. Small bust l., inscr. around. *B.M.C.* xxxv, 20 .. .. .. VF 21/–

ANCIENT INDIA.

W874 **Bactria,** Euthydemos I, 230-190 B.C., Æ (22, thick). Head of Herakles r. R. Free horse r., prancing. *B.M.C.* ii, 7 (*var.*) *fair*/F 30/–

W875 **Indo-Greeks,** Apollodotos I, 185-162 B.C., Æ (25 × 24) *square.* Apollo l., holding arrow. R. Tripod, mgr. *B.M.C.* 20, Pl. ix, 10 .. .. F 15/–

W876 Eucratides I, 169-159 B.C., Æ (21 × 17) *square.* Bust r., helmeted, star device, v. long palm-like crest. R. The Dioscuri r. charging, mgr. below. *B.M.C.*— (*var.*) F/VF 21/–

W877 Menander, 166-145 B.C., Æ (10 × 10) *square.* Elephant's head r. R. Club, mgr. in upper field. *B.M.C.*— (size). *Half of usual size* .. .. *RR* 27/6

W878 — Æ (22 × 20, thick 5 mm.) *square.* Ox-head facing, mgr. Α to r., below. R. Tripod, mgr. each side. *P.M.C.* 500 *RR*, F 45/–

W879 Antialkidas, *c.* 145 B.C., Æ (20 × 17) *square.* Bust of Zeus r., thunderbolt over shoulder. R. Pilei of Dioscuri, mgr. Α . Σ below. *P.M.C.* iv, 197 F/VF 18/6

W880 Apollodotos II, *c.* 140 B.C., Æ (31). Apollo r., mgr. behind. R. Tripod, mgr. each side. Circular legends. *I.M.C.* iv, 6. *Very large and thin flan* .. VF 25/–

W881 — Æ (25). Similar, but square legends each side and thick flan. *Obv.* No mgr. R. Two mgr. as *P.M.C.* 333 .. F 15/–

W882 Hermaios with Kadphises I, 45-50 A.D., Æ (24). Bust of Hermaios r. R. Herakles l. *B.M.C.* xxv, 2 .. .. .. F 6/6

W883 **Indo-Scythians,** Azes I, 90-40 B.C., Æ (26). Demeter l., throned R. Hermes l., mgr. each side. *B.M.C.* xix, 2 F 8/6

W884 **Great Kushans,** Huviskha, 150-180 A.D., Æ (26). King on elephant r. R. Siva 2 armed, holding long trident, ΟΚΡΟ. *P.M.C.* xix, 151 .. F/VF 7/6

W885 — Æ (24). Similar. R. Fire-god l., holding purse. *P.M.C.* xix, 160 F 8/6

W886 — Æ (25). Similar. R. Sun god l., radiate, ΜΙΙΡΟ. *P.M.C.* xviii, 137 *fair*/F 5/6

W887 — Æ (24, thick). Similar. R. Moon god l., nimbate. *P.M.C.* xviii, 140 F/*fair* 4/6

W888 — Æ (22, thin). As previous, but thin and smaller flan, ΜΑΟ. *P.M.C.* 144 *fair*/F 4/6

W889 Vasu Deva, 185-220 A.D., Æ (25). King at altar. R. Siva and bull l. *B.M.C.* xxix, 14 F/VF 6/6

W890 **Puri,** 3rd-4th c. A.D., Æ (23). Raja facing. R. Moon god l. *B.M.C.* xxx, 8 F 7/6

MEDIAEVAL DYNASTIES.

W891 **Shahs of Khwarezm,** Ala-ed-din Muhammad, 1199-1220, Æ (28) *double dirhem,* A.H.—, mint—, Circular legends F 9/6

W892 **Jujids** (Golden Horde of Kipchak), Toktu, 1290-1312. Æ (16) *dirhem,* A.H. 710, Sarai, Khan's name in Mongol. R. Square area .. .. .. VF 12/6

W893 Janibeg, 1340-57, Æ (16) *dirhem,* A.H. 744, New Sarai, Khan's name within circle in centre.. .. .. .. VF 11/6

W894 Birdibeg, 1357-59, Æ (16) *dirhem,* A.H. 759, New Sarai. *Obv.* Circular. R. Six-foil area .. .. VF 11/6

W895 **Chagatais** (Mongols of Transoxiana), Suyurghatmish with Timur, 1369-88, Æ (16) *dirhem,* A.H. 784, Samarkand VF 10/6

W896 **Ilkhans** (Mongols of Persia), Ghazan Mahmud, 1295-1304, Æ (23) *dirhem,* A.H. 702, mint—. Khan's name in Mongol. *Obv.* Pentagon. R. Circular area VF 10/6

W897 Uljaitu, 1304-16, Æ (26) *double dirhem,* A.H.—, Damighan. *Obv.* Circular. R. Quatrefoil area .. .. VF 10/6

W898 Abu-Said, 1316-35, Æ (23) *dirhem,* A.H. 722, Arzenjan. *Obv.* Circular. R. Pentagon area .. .. .. VF 9/6

W899 — Æ (23) *dirhem,* A.H. 731, Kashan. *Obv.* Octafoil. R. Octagon area VF 9/6

W900 — ÆR (23) *dirhem*, A.H. 721, Tabriz. *Obv.* Horse-shoe. R. Looped square area VF 9/6

W901 **Othmanlis** (Turkey). Bayazid I, 1389-1402, ÆR (16) *akcheh*, A.H. 792, no mint .. .. VF 7/6

W902 Muhammad II, 1451-81, ÆR (12) *akcheh*, A.H. 855, Adrianople .. EF 8/6

W903 — ÆR (12) *akcheh*, A.H. 858, Adrianople EF 8/6

MIDDLE AND NEAR EAST.

W904 **Afghanistan,** Habibullah I, 1901-19, ÆR ½ *rupee*, A.H. 1323. Throne room. *W.R.*—(denom.) .. .. EF 7/6

W905 **Khanat of Krimea,** Shahin Giray, 1777-83, ÆR (18, base). *beshlik*, A.H. 1191, year 5, Baghchesarai .. .. VF 12/6

W906 **Turkey,** Ibrahim I, 1640-48, ÆR (12) *akcheh*, A.H. 1049, Constantinople VF 4/6

W907 Abdul Majid, 1839-61, Æ (37), 40 *para*, A.H. 1255, year 19, Constantinople. *W.R.* 13 .. .. .. EF 2/6

W908 **Egypt,** Fuad I (as Sultan), ÆR 5 *piastres*, 1920 A.D. *W.R.* 34 .. VF 12/6

W909 — ÆR 2 *piastres*, 1920 A.D. *W.R.* 35 VF 6/6

W910 **Cairo,** *c.* 1920 A.D., Brass (24), 5 *milliemes token*. *Obv.* Star and crescent, Arabic legend. R. Value .. EF 4/6

W911 **Suez Canal,** Brass (19) 20 *centimes token*, 1865, BOREL LAVALLEY. *W.R.* 8 *R*, VF 17/6

W912 **Soudan,** Abdullah, 1885-97, ÆR 2 *piastres*, A.H. 1304, year 4, Omdurman. Chain border. *W.R.* 1 .. VF 13/6

W913 — ÆR 5 *piastres*, A.H. 1304, year 4, Omdurman. Similar. *W.R.*— VF 21/-

W914 **Tripoli,** Mahmud II, 1808-39, Brass (19) *para*, A.H. 1223, year 23, Tarabelus. *Obv.* Rosette in centre. *Val.* 38 VF 2/6

W915 **Tunis,** Mahmud I, 1730-54, ÆR (14) 2 *para*, A.H. 1165 .. .. VF 3/6

W916 Mustafa III, 1757-73, ÆR (14) 2 *para*, A.H. 1175 .. .. .. VF 3/6

W917 **Algiers,** Mustafa III, 1757-73, ÆR (23) ½ *rial*, A.H. 1187, Jezair .. .. VF 5/6

W918 Selim III, 1789-1807, ÆR (23) ½ *rial*, A.H. 1210, Jezair, 1st issue. Legends each side .. .. VF 4/6

W919 — ÆR (26) *rial*, A.H. 1213, Jezair. Similar .. .. VF 7/-

INDIAN STATES.

W920 **Sultans of Delhi,** Sher Shah, 1538-45, ÆR (27) *tankah*, A.H. 948 of Jahanpanah type. *D.M.C.* 1075A .. .. VF 10/6

W921 — ÆR (27) *tankah*, A.H. 952, Shergadh Bakkar. Square areas. *D.M.C.* 1051 VF 12/6

W922 — Æ (22) *paisa*, A.H. 948, without mint name, type A. *D.M.C.* 1215 VF 3/6

W923 — Æ (23) *paisa*, A.H. 949. Similar, type F. *D.M.C.* 1225 .. .. VF 3/6

W924 — Æ (23) *paisa*, A.H.—. Similar, type G. *D.M.C.* 1230 .. .. VF 3/6

W925 — Æ (23) *paisa*, A.H. 950. Similar, type H. *D.M.C.* 1238 .. .. VF 3/6

W926 — Æ (23) *paisa*, A.H. 951. Similar, type I. *D.M.C.* 1245 .. .. VF 3/6

W927 — Æ (24) *paisa*, A.H. 949. Similar, type L. *D.M.C.* 1256 .. .. VF 3/6

W928 — Æ (23) *paisa*, A.H. 950, Narnol. Square areas. *D.M.C.* 1202 .. VF 4/-

W929 — Æ (22) *paisa*, A.H. 951, Gwaliar. Similar. *D.M.C.* 1192 .. VF 4/-

W930 — Æ (23) *paisa*, A.H. 952, Shergarh Delhi. Similar. *D.M.C.* 1168 VF 4/-

W931 — Æ (24) *paisa*, A.H. 950, Kalpi. Circular areas. *D.M.C.* 1172B VF 4/6

W932 **Hyderabad,** Mahbub Ali, 1868-1911, Brass (17 × 16), *square dub*, undated VF 3/-

W933 **Awadh,** Ghaziu-d-din, 1819-27, ÆR *rupee*, A.H. 1242, year 8, Lakhnau. Tiger supporters .. .. .. VF 10/6

W934 **Gahrwal,** Pradip Shah, 1717-71, ÆR (18) ¼ *rupee*, A.H. 1182, Srinagar VF 6/6

W935 Lallat Singh, 1771-78, ÆR (18) ¼ *rupee*, A.H. 1189, Srinagar .. F/VF 5/6

W936 Parduman Shah, 1785-1804, ÆR (18) ¼ *rupee*, A.H. 1201, Srinagar VF/F 5/6

W937 **Nepal,** Prithvi Narayan, 1768-74, ÆR *mohar*, Saka 1695 .. .. VF 7/-

W938 Rana Bahadur, 1777-99, ÆR *mohar*, Saka 1711 .. .. .. VF 6/6

W939 Girvan Yuddha, 1799-1816, ÆR *mohar*, Saka 1738 .. .. .. VF 6/6

W940 **Manipur,** Bhagya Chandra, 1759-98, Bill (11) *sel.* Raja's initial in Nagari. R. Plain .. .. VF 4/6

W941 Sura Chandra, 1886-90, Bill (11) *sel.* Similar .. .. VF 4/6

W942 **Tipperah,** Kalayana Manikya, 1626-59, ÆR *rupee*, Saka 1577. Grotesque lion l. VF/F 17/6

W943 **Assam,** Gaurinatha, 1780-96, ÆR ⅛ *rupee*, undated .. .. .. VF 5/6

W944 **Travancore,** Rama V, 1885-1931, ÆR ¼ *rupee*, M.E. 1087. *W.R.* 2 .. EF 7/6

W945 **India** (Congress), Ni. (23 square) 2 *anna token*, 1947 A.D. *Obv.* Flag. R. Map of India .. .. EF 2/6

W946 — (Independent), Ni. ¼ *rupee*, 1950. *W.R.* 3 .. .. EF 1/6

W957 **Pakistan,** Ni (square) 2 *anna*, 1948. *W.R.* 4 .. .. EF 1/-

W948 — Ni (scalloped) 1 *anna*, *W.R.* 5 EF 1/-

W949 — Ni (square) ½ *anna*. *W.R.* 6 EF 1/-

W950 — Æ (hole in centre) *pice*. *W.R.* 7 EF 6d

COLONIES IN ASIA.

W951 **E.I.C.** (Bombay), George III, Æ (v. thick) *pice*, 1813. *Atk.* 86 .. VF 5/6

W952 — Æ (thick) ½ *pice*, 1821. R. Nagari inscr. *Atk.* 114 .. .. VF 5/6

W953 — Æ (thick) ¼ *pice*, 1821. Similar. *Atk.* 118 .. .. .. VF 5/6

W954 (Farrukhabad), 1824-1835. Æ *rupee*, year 45 of Alam II, 3rd issue, plain edge. *Atk.* 44 .. .. VF 6/-

W955 — Æ ½ *rupee*. Similar. *Atk.* 46 VF 4/6

W956 — Æ ¼ *rupee*. Similar. *Atk.* 47 VF 2/6

W957 **India,** Q. Victoria, Æ *rupee*, 1840. Bareheaded, 2nd bust, divided legend. *Atk.* 49 .. .. EF 6/-

W958 — Æ ½ *rupee*, 1840. Similar. *Atk.* 50 EF 4/-

W959 — Æ ¼ *rupee*, 1840. Similar. *Atk.* 51 EF 2/6

W960 — Æ ⅛ *rupee*, 1840. Similar. *Atk.* 52 EF 2/-

W961 **Goa,** D. Jose, 1750-77, Pewter (28) 5 *bazarucos*, undated, of shield and cross type. *Grogan*—(c/o 1712) .. VF 15/-

W962 **Ceylon,** George III, Æ (18, v. thick), 1/48 *rupee*, 1812. Elephant l. *W.R.* 10 F/VF 10/6

W963 **Sarawak,** C. V. Brooke, Ni 10 *cents*, 1934, *W.R.* 9 .. .. VF 3/6

W964 — Ni. 5 *cents*, 1927. *W.R.* 10 VF 3/-

W965 **Sumatra,** Æ *proof* 3 *kapangs*, 1787—A.H. 1202. Oblique milling. *Atk.* 15 EF 21/-

W966 — Æ *proof* 2 *kapangs*, 1787—A.H. 1202. Similar. *Atk.* 16 .. .. EF 15/-

W967 — Æ *proof* 1 *kapang*, 1787-A.H. 1202. Similar. *Atk.* 17 .. .. EF 10/6

W968 **North Borneo,** Edward VII, Ni. 2½ *cents*, 1903. *W.R.* 3 .. .. EF 3/6

W969 **Batavian Republ.,** Æ 1/16 *guilder*, 1802. Ship. *W.R.* 12 .. .. EF 6/6

AFRICA.

W970 **Ethiopia,** Menelik II, 1889-1913. Æ ¼ *talari*, by Lagrange. *W.R.* 3 EF 7/6

W971 **Mombasa,** Æ ¼ *anna*, 1888. *W.R.* 5 EF 3/6

W972 **Uganda,** George V, Æ 50 *cents*, 1913. *W.R.* 9 .. .. VF 7/6

W973 **E. Africa,** George V, Æ *shilling*, 1922, 2nd issue. *W.R.* 3 .. .. EF 7/6

W974 **German E. Africa,** Wilhelm II, Æ *rupee*, 1910, 2nd issue. *W.R.* 5 EF 7/6

W975 **Mozambique,** Æ 5 *escudos*, 1935. Square shield. *W.R.* 2 .. .. EF 6/6

W976 **Mauritius,** George V, Æ ¼ *rupee*, 1934. *W.R.* 3 .. .. VF 6/6

W977 **Seychelles,** George VI, Æ 25 *cents*, 1939. *W.R.* 3 .. .. EF 7/6

W978 **S. Rhodesia,** George VI, Ni ½ *penny*, 1938. *W.R.* 19 .. .. EF 2/-

W979 **Z.A.R.,** Krueger, Æ 2 *shillings*, 1897. *W.R.* 3 .. .. EF 8/6

W980 — Æ *penny*, 1894. *W.R.* 7 EF 5/6

W981 **S. Africa,** George V, Æ 3 *pence*, 1924, 1st issue. *W.R.* 6 .. .. EF 3/6

W982 **Belgian Congo,** Leopold II, Æ 50 *centimes*, 1887. *W.R.* 4 .. EF 4/6

W983 **West Africa,** George V, Æ *shilling*, 1913. *W.R.* 2 .. .. EF 5/6

W984 **Sierra Leone,** Æ (29) *proof penny*, 1791. *W.R.* 7 .. .. EF 12/6

W985 **Liberia,** Æ *cent*, 1862. Raised rim. *W.R.* 3 .. .. EF 4/6

BRITISH COMMEMORATIVE MEDALS.

(a) HISTORICAL AND NAVAL.

M.I. = Medallic Illustrations of British History.
B.N.M. = British Naval Medals by Milford Haven.
Betts = American History illustrated by medals.
v.L. = van Loon.—Histoire Metallique.

M134 **Henry VIII,** Æ 100 *medallion*, uniface, probably executed after a painting by Holbein. His bust nearly facing with flat hat. *M.I.* 46. *Cast of the 17th or 18th century interesting portrait, RR, good* VF 45/-

M135 **Mary, Queen of England** (1553), Æ 34. Her bust l., coif bordered with jewels, veil behind; no legend. R. MARY OF ENGLAND engraved. *M.I.* 19, *not contemporary, in old leather case interesting, good* VF 25/-

M136 **James I,** 1616, lead silvered 56 × 43 by John Passe. His three quarter bust r. with bare head, lace ruff and badge of the Garter, monogram I P (Passe) at left edge. R. Shield of Britain in the Garter between supporters, full titles around, motto BEAI PACIFICI below. probably trial piece in lead in imitation of engraving. *See M.I.* 61 *interesting portrait, RRR, good* VF £12/10/-

M137 **Charles I : Peace or War,** 1643, Æ 29, by Rawlins. His laur. and cuir. bust r. R. IN VTRIVMQVE PARATIS, sword and olive branch between crowned C—R. *M.I.* 134 *scarce*, EF 27/6

M138 **Laud, archbishop of Canterbury,** executed 1645, Æ 57, by John Roettier. His bust r. with robes, ruff and cap. R. SANCT CAROLI PRAECVRSOR, two angels carrying crown, sceptre and orb of Charles I to heaven, another bearing mitre and crozier, view of London below. *M.I.* 147. *Contemporary gilt* .. .. *RR*, EF 90/–

M139 **Charles I calling for unanimity,** 1648, Æ 29, by Briot. His laur. and cuir. bust r., B below. R. Three crowns united by cord. *M.I.* 180 *R*, FDC 45/–

M140 **Death of Charles I,** 1649, Æ 29, by Rawlins. His bust l., bare-headed. R. Rock in heavy sea buffeted by winds. *M.I.* 190 .. .. *R, good* EF 42/–

M141 **Charles I Royalist badge,** Æ gilt, 39 × 29. Crowned bust r. with long hair and falling lace collar. R. The crowned shield of Britain in the Garter. *M.I.* 232. *The loop on top and bottom missing sharp interesting and artistic portrait, RR,* EF £10/10/–

M142 **Charles and Henrietta Maria,** Æ gilt, 30 × 28 badge. His laur. and cuir. bust r., with lion's head on shoulder. R. Bust of Henrietta Maria, no legend. *M.I.* 218. *With loop for wearing* *RR*, VF 85/–

M143 **Death of Cromwell,** 1658, Æ 49, probably struck in Holland. His cuir. and laur. bust l. NON DEFITIENT OLIVA . SEP . 1658. Olive tree and shepherd attending flock. *M.I.* 85 ; *v.L.* ii, 450 *R*, EF 85/–

M144 **Charles II and Catherine of Braganza** (Portugal) : marriage (1662), Æ 54, gilt by Bower. His laur. and cuir. bust r. with long flowing hair, G . B . below. R. Her young bust r. with love lock and small crown. *M.I.* 93 .. *pierced for ring without damaging medal, RR, good* VF 37/6

M145 **Naval reward for the Lord High Admiral Prince of York** (later James II) after the battle of Lowestoft (1665), Æ 65, by J. Roettier. IACOBVS DVX EBOR . ET . ALBAN FRATER, his cuir. and draped bust with short hair r. R. GENVS ANTIQVVM trophy, ships in background. *M.I.* 143 ; *B.N.M.* 55 ; *v. L.* ii, 505 *RRR, good* VF £8/10/–

M146 **Treaty with Spain and free passage through Scheldt and Flanders proposed,** 1666, Æ 56, by J. Roettier. Laur. head of Charles II with long hair. R. Charles standing on pedestal in front of fleet. *M.I.* 162 (the rare dies). *v.L.* 521 *RR*, EF 95/–

M147 **Proclamation of peace of Breda,** 1667, Æ 52, by Gerard Pool. Neptune in biga drawn by sea-horses in front of naval action. R. NULLA SALUS BELIO, etc., view of Breda, the shields of England, France, Sweden, Denmark and the Netherlands above. *M.I.* 183 ; *B.N.M.* 582 ; *v.L.* 538, 3 .. .. *RR*, FDC 95/–

M148 **Charles II and Catherine,** Æ 29, by Ph. Roettier, 1667. CAROLVS II REX, draped bust with short hair. R. Bust of Catherine. *M.I.* 192 .. .. *good* EF 25/–

M149 **State of Britain** (1667), Æ 29. Similar. R. QVIESCIT, lion to l. resting. *M.I.* 193 .. .. *good* VF 21/–

M150 **James II and Queen Mary** (of Modena) (1685), Æ 30. His laur. bust r. R. Her laur. and draped bust. *M.I.* 12 *good* VF 18/6

M151 **Religious tolerance in England under James II,** 1688, Æ 58, satirical by Smeltzing. RES IMMODERATA CUPIDO EST, dog, wearing rosary, about to swallow book with M I, trampling upon another with L C (libertas conscientiae) and throwing down a third on a column. R. LIBERTAS CONSCIENTIAE, etc., on pedestal inscribed BRITANNIA, bible with cap of Liberty, dove, chalice, wafer, mitre, and cap ; hand from heaven with scroll. *M.I.* 35 ; *v.L.* iii, 337 *RRR, good* EF £5/15/–

M152 **William III landing at Torbay,** 1688, Æ 50, by Bower. His cuir. bust r., 1688 on truncation. Prince on horseback with his troops on beach, fleet at sea, soldiers raising the prostrate figure of Justice, inscription on edge. *M.I.* 64 ; *v.L.* iii, 353 .. .. .. *RR, as a struck medal, small piercing for ring,* EF 75/–

M153 — The same medal cast *R, good* EF 37/6

M154 **Naval battle of La Hogue,** 1692, Æ 38, by Dishoecke. Laur. and cuir. bust of William III r. R. Naval battle, two shields (England, Holland) below. *M.I.* 246 ; *B.N.M.* 82 ; *v.L.* iv, 104 *R, good* VF 37/6

M155 **Prince James** (son of James II) **the old Pretender,** 1697, Æ 45, by Roettier. His young bust l. R. IACTATVR NON MERGIT VNDIS sailing ship defying the storms. *M.I.* 500 .. *RR, good* VF £5/10/–

M156 **Queen Anne : Expedition to Vigo Bay,** 1702, Æ 37, by Croker. Her crowned bust l. R. VIRES, etc., view of the bay and harbour with burning ships. *M.I.* 18 ; *B.N.M.* 120 ; *Betts* 100 *good* EF 18/6

M157 — Æ 45, by Boskam. Her bust l. R. Naval battle in front of bay. *M.I.* 20 ; *B.N.M.* 122 ; *Betts* 96 .. *good* VF 37/6

M158 **Capitulation of Liège,** and other towns on the Meuse, 1702, Æ 38, by Croker. Similar to M156. R. Bombardment of Liège. *M.I.* 26 *good* EF 21/–

M158A **British victories,** 1704 (Blenheim, Gibraltar, etc.). Æ 44, by P. H. Müller. Her draped bust l., P.H.M. below. R. MARIS IMPERIVM, Neptune presents trident and naval crown to Anne as Britannia, inscription on edge. *M.I.* 69 VF 37/6 ; *brilliant, RR* 67/6

M159 **Peace of Utrecht,** 1713, Æ 58, by Croker. Her laur. bust r. R. COMPOSITIS, etc. R. Britannia seated, holding olive branch. *M.I.* 256
rare in this size, EF 45/–

M160 **George I : arrival in England,** 1714, Æ 68, by Croker. His laur. bust r. RECTOR MARIVM, George I as Neptune in biga drawn by sea-horses. *M.I.* 6 *RR, good* VF 75/–

M161 **Flight of Princess Clementine** (Sobieska) to Innsbruck 1719 (betrothed to James III the Pretender), Æ 48, by Hamerani. Her bust l. R. The princess in biga, view of Rome with the Colosseum in the distance. *M.I.* 49 ; *H. Cz.* 5960
R, good EF 50/–

M162 — Similar, in Æ, EF 15/– ; (b) Æ gilt, EF 17/6

M163 **Marriage of James III to Clementine** (1719), Æ 52, by Hamerani. His cuir. bust r. R. Her bust l. *M.I.* 52 ; *H. Cz.* 7778 *RRR, good* F 27/6

M164 **Protest against Hanoverian rule,** 1721, Æ 50. Bust of James III. R. The horse of Hanover trampling on lion and unicorn, view of London with St. Paul in background. *M.I.* 63 *RR,* VF 75/–

M164A — Æ, similar EF 16/– ; *gilt* EF 18/6

M165 **Death of the Duke of Marlborough,** 1722, Æ 41, by Dassier. His bust facing. R. Victory standing between two trophies. *M.I.* 68 .. .. *good* EF 13/6

M166 **Prince Charles (Bonnie Prince Charlie) and Prince Henry** (1729), Æ. MICAT INTER OMNES, bust of Charles, star in field. R. ALTER EGO, bust of Henry (later Cardinal of York), inscription on edge. *M.I.* 34 .. *R, good* EF 37/6

M167 **Admiral Vernon : Portobello taken,** Æ 39. Three quarter bust half l., holding baton. R. HE TOOK, etc., six ships entering the port. *M.I.* 110 ; *B.N.M.* 187 ; *Betts* 215 *RR, in silver, good* F/VF 37/6

M168 — Æ 27. Vernon in full figure standing l., gun at his side. R. Similar. *M.I* 134 ; *Betts* 220
scarce in this small size, VF 15/–

M169 — Æ 39. His three quarter bust and Admiral Brown's facing each other. R. WHO TOOK, etc., ships entering harbour. *M.I.* 105 ; *Betts* 261 *good* VF 18/6

M170 — Æ 38. Shield of England between supporters, G/—R above. R. Ships entering the harbour, inscription illegible. *M.I.* 125 ; *Betts* 270 .. *RRR, fair* 18/6

M171 **Carthagena taken,** 1740, Æ 39. Full length figure of Vernon standing between ships. R. TOOK CARTHAGENA, ships sailing in the harbour passing the ports of LAGO, etc. mentioned. *M.I.* 156 ; *Betts* 332
R, nearly VF 18/6

M172 — Æ 39. Vernon and Ogle in full length figure standing. R. SPANISH INSOLENCE CORRECTED, etc., ships sailing into the harbour in which boat with DON BLASS. *M.I.-Betts* 232
RR, about F/VF 21/–

M173 **George II : Victories in America,** 1759, Æ 44. His old laur. and cuir. bust l. R. Shield with lis of France reversed between lion and unicorn, the names of the captured places, Guadaloupe, Niagara, Quebec, etc., and the names of the commanders in circle. *M.I.* 444 ; *B.N.M.* 367 ; *Betts* 418 *RRR, good* VF 95/–

M174 — Similar in Æ .. *good* VF 18/6

M175 **George III : accession and foundation of the Academy of Arts,** 1760, Æ 38. His young laur. bust l. R. Art personified kneeling before king, cherubs behind .. .. EF 22/6

M176 **The Alnwick castle restored,** 1766, Æ 44, by Kirk. Draped bust of Hugh Percy Earl of Northumberland. R. View of the castle, date and signature in ex.
R, good EF 55/–

M177 **Death of John Murray, Duke of Atholl,** 1774, Æ 37, by Kirk. His bust r. R. Mourning figure .. *good* VF 27/6

M178 **Cardinal Prince Henry of York,** 1788 (the Jacobite king Henry IX), Æ 63, by Hamerani. His bust r. in ecclesiastical vestments. R. Faith standing, lion and crown at her feet, view of St. Peter's and Tiber bridge of Rome in the distance
RRR, FDC 85/–

M179 — Æ 63. Similar *RR,* FDC 30/–

M181 **Death of Princess Charlotte,** 1817, Æ 48, by Mudie and Mills. Her bust half l. R. Britannia mourning in front of broken column .. .. EF 18/6

M182 **Queen Caroline returning to England for the coronation of George IV,** 1820, Æ 55, by Renkin. Her head r. R. Inscription .. .. EF 38/–

M183 — Æ 58, by Rouw. Her bust r. R. Inscription .. .. .. EF 10/6

M184 **Victoria : Council medal of the exhibition 1851,** Æ 90, by Domard. The conj. busts of the Queen and the Prince Consort l. R. Britannia uniting Arts and Trade, dedication to the East India Comp. on edge .. .. *good* VF 18/6

M185 **Centenary of the conquest of Trinidad,** 1897, Æ 48. Bust of Sir Ralph Abercromby facing. R. Fleet in front of Trinidad .. .. FDC 30/–

M186 — Similar, in white metal *fair* 5/–

M187 **Joseph Chamberlain,** Æ 40 :—(a) as **Chancellor and Exchequer.** His bust r. R. Part of his speech on preferential tariffs ; (b) **Visit to South Africa.** *The two medals in original case* .. EF 12/6

M188 **Lloyd George, Prime Minister,** 1917, Æ 66. His bust facing. R. Victoria standing. *In original case* .. EF 15/–

M189 **Neville Chamberlain's mission to Munich,** 1938, Æ 35. His bust facing. R. Laurel branch .. .. .. EF 13/6

(b) TICKETS, PASSES, ETC.

D. & W.=Davis and Waters, Tickets and Passes.

M190 **THEATRES, Theatres in London : Drury Lane,** 1671, Æ 25. Bust of Charles II. VPPER GALLERIE 1671. *D. & W.* 194 *RR*, VF 32/6

M191 **Grecian Theatre,** situated in City Road, *brass* 42 *uniface.* GRECIAN THEATRE . B . O . CONQUEST, PITT in centre. *D. & W.* 263 .. .. .. *RRR* 22/6

M192 **Theatre Royal, Haymarket,** Æ 28, *uniface.* SECOND GALLY 1778 in field. *D. & W.* 272 .. .. .. *good* VF 10/6

M193 **New Surrey Theatre** (Blackfriar Rd.), 1865, *brass* 32. BOX / 1865 in field. *D. & W.* 389 .. .. *R*, VF 13/6

M194 **Margate,** Æ 37 uniface. MARGATE THEATRE, PIT / 1791 in centre. *D. & W.*—. *See D. & W.* 395 (BOX) *RRR*, VF 32/6

M195 **GARDENS, SHOWS, etc. King James' Palace, Bath,** Æ 29. Bust of James II. R. Inscription cmkd. RF. *D. & W.* 14 .. *RR, good* F 22/6

M196 **CLUB AND SOCIETY TICKETS. Amicable Society,** founded 1696. Æ 40. Clasped hands, royal crown above, 1696 below. R. AMICABLE CONTRIBUTIONSHIP building. *D. & W.* 7 ; *M.I.* 422 *RRRR, good* EF £6/10/–

Struck for the first fire insurance co. which was still in existence under the name "Hand in Hand" up to the 20th cent.

M197 **Orange Society** (created to celebrate centenary of William III's giving a Constitution), Æ 45, by Mossop. William III on horseback. l. R. KING'S CONSTITUTION, with garter as top suspender and orig. orange ribbon. *D. & W.* 545 *R, good* VF 35/–

M198 **Sentimental Magazine tickcts** (about 1774), Æ 26, by Kirk. Busts l. or r. R. Legend. The following portraits : Blackford, Lord Camden, Chatham, Cromwell, Duchess of Cumberland, Garrick, George II and III, Duke and Duchess of Gloucester, Marques of Granby, John Wilkes, twelve in all (Queen Charlotte missing). *D. & W.* p. 183 *good* VF 30/–

M199 **SCHOOL MEDALS AND PRIZES, Blundell's School, Devon,** founded 1604. Æ 40, by Pingo (about 1760). View of the building. R. Minerva holding wreath over boy kneeling. *D. & W. and M. I.*— EF 25/–

M200 **Greenwich Hospital School,** Æ 42. Bust of Nelson l. R. Engraved name of prize-winner, 1882. *D. & W.* 218. *Med. in nummis*, 2881 .. .. EF 22/6

M201 **Helston School, Cornwall,** Æ 45. Inscription on *obv.* and *rev.* *D. & W.* 245 *good* VF 7/6

M202 **School of Industry,** 1839. In original green leather case in sunk lined compartment, the medal Æ 58, by Halliday. Three scenes. R. Inscription. Also small booklet leather, W. H. MEDAL tooled on cover in gold ; the medal reproduced and described inside. *D. & W.* 356 .. EF 25/–

M203 **St. Saviour School,** 1839, Æ 42. Bust of Queen Elizabeth I. R. View of the school. *D. & W.* 403 ; *M. I.* 38 FDC 27/6

M204 **The Northampton Blue Coat Charity School,** Æ 38. Arms of the city. R. REWARD OF MERIT. *D. & W.*—. Similar to 481 .. .. .. FDC 18/6

M205 **COLLIERY TICKETS. Whitehaven Harbour** (*ca.* 1650). Æ 29. WHITEHAVEN. R. HARBOUR. *D. & W.* 159 *RR* 21/–

M206 **PARK TICKETS, King's Private Roads** (Chelsea), 1737, Æ 35 × 32. Royal monogram of George II. R. THE KINGS PRIUATE ROADS 17 37, number punched in, pierced for attaching to key. *D. & W.* 5 *R*, VF 18/6

M207 — *brass* 34. Monogram GR. R. Similar, but no date *R*, VF 16/–

M208 **TRUCK TICKETS. Stein, Brown & Co.,** Æ 35 and 28 for two and one tubs. Castle. R. TWO rep. ONE TUB. *D. & W.* 53 and 54 *the pair, good* VF 8/6

WAR MEDALS AND DECORATIONS.

Campaign Medals.

F7560 **Naval G.S.,** 1 bar, 1 JUNE 1794 (Glorious First of June), Isaac Homewood, L.M., H.M.S. "Latona" .. VF 90/–

F7561 — — EGYPT :—(a) William Evans, Marine, H.M.S. "Kent," VF 65/– ; (b) John Spurway, O.S., H.M.S. "Modeste," VF 65/–

F7562 — — 4 Nov. 1805, R. A. Newman, Vol. 1st class, H.M.S. "Courageux" EF £6

F7563 — — ALGIERS :—(a) Andrew Wight, Midshipman, H.M.S. "Leander," EF 45/– ; (b) William Love, Pte., R.M., H.M.S. "Impregnable," EF 25/–

F7564 **Military G.S.,** 1 bar, MAIDA, Joseph Walton, 81st Foot .. VF £6/15/–

F7565 — — CORUNNA, John Stewart, 42nd Foot. *Rare single bar nearly* EF 90/–

F7566 — 3 bars, SALAMANCA, VITTORIA, ST. SEBASTIAN, Benjm. Burton, 1st Foot EF 97/6

F7567 — 5 bars, CUIDAD, RODRIGO; SALAMANCA, VITTORIA, PYRENEES, TOULOUSE, Robt. Doubleday, 45th Foot *good* VF £5/10/-

F7568 — 8 bars, BARROSA, CUIDAD RODRIGO, SALAMANCA, VITTORIA, PYRENEES, ST. SEBASTIAN, ORTHES, TOULOUSE, John Edwardstaff, 95th Foot .. .. EF £11/10/-

F7569 **Army of India,** 1 bar, AVA, 89th Foot: —(a) T. Wright, EF 95/-; (b) J. Kerby, *nearly* VF 90/-

F7570 **Ghuznee**:—(a) William Stott, 16th Queen's Lancers (*named in field*), F 65/-; (b) L. Higgins, E.L.I. (*named on edge*), F 65/-; (c) un-named, F 25/-

F7571 **Cabul,** E. Branagan, 40th Regt. (*with scroll suspender*) .. .. *good* VF 63/-

F7572 **Sutlej,** ALIWAL in ex., without bar, Tpr. Pokur Sing, 3rd L.C. .. *fair* 22/6

F7573 — FEROZESHUHUR in ex., 1 bar, SOBRAON, Sepoy Sewlaul, 41st, N.I. *fair* 30/-

F7574 — MOODKEE in ex., 1 bar, SOBRAON, G. Hills, 80th Regt. .. .. *fair* 35/-

F7575 **Punjab,** 1 bar, MOOLTAN, Pte., Sappers and Miners .. .. .. F 12/6

F7576 — — GOOJERAT, 53rd Foot *good* F 17/6

F7577 — 2 bars, CHILIANWALA, GOOJERAT, 3rd Lt. Dgns. .. .. F/VF 22/6

F7578 — — MOOLTAN, GOOJERAT, 60th Royal Rifles .. .. .. *good* F 21/-

F7579 **Baltic,** *un-named* .. VF 10/6

F7580 **Ashantee,** without bar, to various ships .. .. .. *each* VF 12/-

F7581 — 1 bar, COOMASSIE, 42nd Hldrs., 2nd Batt. R.B. and H.M.S. "Barracouta" *each,* VF 21/-

F7582 **Afghanistan,** without bar, 2/9th Foot and 51st Regt. .. *each,* VF 10/6

F7583 — 1 bar, ALI MUSJID, 51st Regt. VF 11/6

F7584 — — KANDAHAR, 72nd Hldrs. F/VF 10/6

F7585 — 2 bars, CHARASIA, KABUL, 67th Foot VF 15/-

F7586 — 3 bars, CHARASIA, KABUL, KANDAHAR, 72nd Hldrs. .. .. .. F 21/-

F7587 — 4 bars, PEIWAR KOT, CHAR., KAB., KAND., 72 Hldrs. *scarce,* F/VF 55/-

F7588 **Kabul to Kandahar Star** (Roberts Star), 72nd Hldrs. and 4th Goorkha Regt. *each,* VF 17/6

F7589 **British South Africa Company,** Rhodesia 1896, Sgt. B.F.F., Tpr. M.R.F., and Troop Sergt. Major, U.V. *each, about* VF 72/6

F7590 — Matabeleland 1893, Tpr. Salisbury Horse and Tpr. Raaf's Column *each,* VF £5/5/-

F7591 **East and West Africa,** 1 bar, 1892 (Expedition against Tambi, Toniataba and the Jebus), Pte., Lagos Hausa Force EF 22/6

F7592 — — GAMBIA 1894, H.M.S. "Magpie" and "Raleigh" .. .. *each,* VF 21/-

F7593 — — BENIN RIVER 1894, H.M.S. "Alecto" and "Philomel" *each, about* EF 22/6

F7594 — — BENIN 1897, H.M.S. "Forte," "Phoebe," "Philomel," "St. George," "Theseus" and "Widgeon" *each, about* VF 15/-

F7595 — — M'WELE 1895 on rim VF 20/-

F7596 — — SIERRA LEONE 1898-99, A.B., H.M.S. "Blonde" .. *good* VF 22/6

F7597 — — 1900, Kaduna and Munshi Expeditions, 2nd N. Nigeria Regt. *very rare and* VF 55/-

F7598 — 2 bars, BENIN RIVER 1894, BRASS RIVER 1895, Pte., R.M., H.M.S. "Widgeon" VF 25/-

F7599 — — BRASS RIVER 1895, BENIN 1897 on M'WELE 1895 medal *nearly* VF 37/6

F7600 **Queen's Sudan, Bronze,** *un-named* EF 12/6

F7601 **Tibet,** without bar, **Bronze,** Cooly, Peshawar C. Corps .. .. VF 37/6

F7602 **India G.S. (1908-1935),** 1st issue, Ed. VII, 1 bar, N.W.F. 1908, Ry. Mun. Fus., W. Yorks Regt. and Kyber Rifles *each,* VF 17/6

F7603 — — **Bronze,** S. and T. Corps VF 17/6

F7604 — 2nd issue, George V, 1 bar, AFGHANISTAN N.W.F. 1919, 2. Kings, R.W. Kent Regt. and R.A. .. .. *each,* VF 15/-

F7605 — — — WAZIRISTAN 1919-21, R.W. Fus., M.G.C. and R.A. *each, about* VF 17/6

F7606 — — — WAZIRISTAN 1921-24, R.A. VF 17/6

F7607 — — — N.W.F. 1930-31, R.A. EF 16/-

F7608 **Naval G.S.,** Geo. VI, 1 bar, PALESTINE 1945-48, Mne. R.M. *scarce* EF 90/-

F7609 — — — **Malaya,** Mne. R.M. *scarce* EF 97/6

F7610 **India G.S.** (1936-39), Geo. VI, 1 bar, N.W.F. 1937-39, R. War. R. *scarce* EF 70/-

World War, 1939-45. Stars and Medals.

F7611 1939/45 Star 12/6

F7612 Atlantic Star 17/6

F7613 Air Crew Europe Star (when in stock) 37/6

F7614 Africa Star 10/6

F7615 Pacific Star 17/6

F7616 Burma Star 17/6

F7617 Italy Star 10/6

F7617A France Germany Star .. 12/6

F7618 Defence Medal 17/6

F7619 War Medal 7/6

F7620 Clasps or Emblems where applicable from 2/-

MISCELLANEOUS.

Decorations and Medals.

F7621 **Order of the Bath.** K.C.B. Badge (Civil). Silver gilt .. VF £6/15/-

F7622 — C.B. Badge (Civil). 18 ct. gold EF SOLD

F7623 **Order of St. Michael and St. George.** Badge of Companion (C.M.G.). Silver gilt and enamel. *In case of issue* EF £7

F7624 — Another, *without case* VF £6/10/-

F7625 **Royal Victorian Order.** Badge of Commander (C.V.O.). Silver gilt and enamel. *In case of issue* EF £6/6/-

F7626 **Order of the British Empire.** Badge of Commander (C.B.E.), 1st type, figure of Britannia within circle. Silver gilt and enamel. *In case of issue* EF £5/5/-

F7627 — Another. *In case of issue, with corresponding miniature* EF £5/10/-

F7628 — Badge of Officer (O.B.E.), 1st type, as above, silver gilt :—(a) *In case of issue*, EF 45/- ; (b) *without case*, VF 42/6

F7629 — Badge of Member (M.B.E.) :—(a) *In case of issue*, VF 42/6 ; (b) *without case*, VF 40/-

F7630 — Another, for ladies. *In case* VF 42/6

F7631 **Distinguished Service Cross (D.S.C.),** Geo. V head *rare* SOLD

FOREIGN ORDERS AND DECORATIONS.

F7633 **Abyssinia.** Medal of the Order of the Star of Ethiopia. Gilt .. .. EF 15/-

F7634 **Austria.** Francis Joseph. Red enamel and gilt cross with crown. R. 1849 VF 21/-

F7635 — — Another, smaller, without crown .. .. VF 15/-

F7636 — — — Base metal, without crown. R. 1916 .. .. .. VF 7/6

F7637 — Officer's Cross, Red and white enamel with gilt wreath. "Verdienst" in centre. R. Plain white enamel *almost* EF 21/-

F7638 — Bronze Cross for Balkan Crisis, 1912-1913 .. .. .. VF 12/6

F7639 — Bronze Medal for Defenders of the Tyrol, 1914-1918 .. .. VF 17/6

F7640 — Bronze Commemorative Medal, 1914-1918 .. .. .. VF 8/6

F7641 — Army Cross. Karl-Truppenkreuz, 1916. White metal .. .. VF 7/6

F7642 — Officers silver medal for Merit, 1797 .. .. VF 15/-

F7643 — Red Cross Oval gilt medal. A small white enamel shield in centre of which is a red cross. R. 1864-1914 VF 10/6

F7644 — Francis Joseph, Jubilee. Gilt cross with wreath. R. 1848-1908 .. VF 7/6

F7645 — Laeso Militi. For wounded. Head of Emp. Carl. Zinc .. .. VF 7/6

F7646 — *Group of five* :—Bronze Cross for Balkan Crisis, 1912-1913 ; F. J. Large silver medal for bravery ; small medal for bravery ; Army Cross—Karl-Truppenkreuz 1916 ; German oval gilt medal, Der Kyffhäuserbund, 1914-18. The group mounted as worn .. .. VF 45/-

F7647 **Belgium.** Croix de Guerre. Æ VF 21/-

F7648 — Palms of the Order of the Crown. Æ .. .. .. *nearly* VF 17/6

F7649 — Commemorative Medal, 1914-18. Æ .. .. VF 9/6

F7650 — Medal of King Albert. En Temoignage de Reconnaissance Nationale, 1914-1918. Æ .. .. .. VF 15/-

F7651 — Octagonal medal for 100th anniversary of Belgium Independence. R. 1830-1930 .. .. .. EE 15/-

F7652 — Gilt medal commemorating the reign of Leopold II. R. 1865-1905 EF 12/6

F7653 — Bronze commemorative medal for 1870-71. *Obv.* Belgian Lion, shield and crown, L'Union Fait La Force. R. "A," 1870-71 .. .. *scarce*, VF 17/6

F7654 — Civil award for Waterloo. Bronze medal .. .. VF 15/-

F7655 — Bronze medal surmounted by crown. Awarded for services to the royal household .. .. .. VF 15/-

F7656 **France.** Legion of Honour. Henri IV. Chevalier's badge. *Damage to white enamel, but rare* 21/-

F7657 — — Napoleon III, Officer's badge. *Very slight damage to white enamel* 30/-

F7658 — — — Chevalier's badge. *Rather worn and damage to white enamel* 21/-

F7659 — Médaille Militaire, Republic. Badge surmounted by trophy of arms EF 22/6 ; *about* F 15/-

F7660 — — Head of Louis Napoleon. Badge surmounted by eagle *about* VF 21/- ; *fair state* 10/6

F7661 — Croix de Guerre, 1939. *Scarce date* .. .. EF 21/-

F7662 — — 1914-1918 *about* VF 15/-

F7663 — — 1914-1916 *about* VF 15/-

F7664 — Oval medal. Union Des Femmes De France. With bar PARIS on ribbon. Numbered 3261 on *rev.* *about* VF 10/6

F7665 — — Another, without ribbon bar, numbered 22 on *rev.* .. .. VF 9/6

F7666 — Médaille Des Evadés. (Escaped Prisoners of War). Æ.. .. EF 15/-

F7667 — Combatants Volunteer Cross, 1914-1918. Rbn. green, red centre with gold stripe on either side .. .. VF 12/6

F7668 — Victory Medal, 1914-1918. Æ VF 10/6

F7669 **Japan.** China Incident War Medal. Instituted in 27 July 1939, for service in the war with China. Æ .. .. VF 15/-

F7670 — 1931-34 Incident War Medal. Instituted in 23 July 1934, for service in the conquest of Manchuria. Æ .. VF 27/6

F7671 — Taisho Coronation of 1915 Medal. Instituted on 13 August 1915 and issued to those who attended the ceremonies. Æ VF 25/-

F7672 — Showa Coronation of 1928 Medal. Instituted on 1 August 1928 and issued as previous item. Æ .. .. VF 25/-

F7673 — First National Census of 1920 Medal. Instituted on 17 June 1921 and issued for service in the Census. Æ VF 22/6

F7674 — 2600th National Anniversary Medal 1940. Instituted on 27 July 1940 and issued to those who attended the anniversary ceremonies. Æ .. .. VF 22/6

F7675 **Luxemburg.** Order of the Oaken Crown, officer's badge in gold and white enamel, with rosette on ribbon. *Some damage to white enamel on reverse* 70/-

F7676 **Papal States.** Leo. XIII Cross for Pilgrims to Jerusalem. Æ .. EF 37/6

F7677 **Poland.** Order of Merit. Breast badge in silver and red enamel with swords EF 47/6

F7678 **Russia.** Order of St. Anne, 3rd class badge with swords. Silver gilt and enamel *about* VF 57/6

F7679 — — Another, a little smaller. Gold and enamel .. .. *nearly* VF 95/-

F7680 — Order of St. Stanislaus. 2nd class badge. Gold and enamel .. EF £7

F7681 **Spain.** Order of Military Merit. Breast Star. Order founded by Isabelle II on 3 August 1864. The star or plaque is an eight-pointed star of faceted rays on which is superimposed the cross with fleurs-de-lis in the angles and crown on the upper arm. The date of the action—18-xi-1916 for which the award was made is engraved on a small plate below the crown. *A handsome and rare decoration. In leather bound case* SOLD

F7682 **United States of America.** American Campaign, 1941-1945. Æ .. EF 21/-

F7683 — American Defense. Æ EF 22/6

F7684 — Asiatic Pacific Campaign. Æ EF 21/-

F7685 — European African Middle Eastern Campaign. Æ .. .. EF 21/-

F7686 — World War II, Victory Medal. Æ EF 17/6

F7687 — World War I, Victory Medal. Æ VF 15/-

F7688 — Good Conduct. Army. Æ EF 20/-

F7689 **Venezuela.** Order of the Bust of Bolivar. Neck badge (approx. 45 mm. × 40 mm.). Oval badge of twenty-eight rays having in centre the bust of Bolivar encircled by a blue band inscribed Simon Bolivar. R. Arms of Venezuela. Silver gilt and enamel. *A most attractive decoration in good* EF *condition* 70/-

BOOKS.

Z236 ALLAN, Rev. W. **The Christian Teaching of Coin Mottoes.** London, 1911. Many illustrations in text, 184 pp., cloth, 8vo 14/-

Z237 ALLAN, John. **Ancient India.** London, 1936. 46 plates, 319 pp., cloth, 8vo 60/-

Z238 ALLEN, D. F. **Catalogue of English Coins:** The Cross-and-Crosslets ("Tealby") type of Henry II. London, 1952. xxv plates, 214 pp., cloth, 8vo 80/-

Z239 BERRIMAN, A. E. **Historical Metrology.** A new analysis of the archaeological and the historical evidence relating to Weights and Measures. London, 1953. 65 photographs, and line drawings, 224 pp., cloth, 8vo 16/-

Z240 BROOKE, G. C. **Norman Kings.** 2 vols. London, 1916. 62 plates, cloth, 8vo. (O.P.) 90/-

Z241 CANTERBURY BRANCH OF THE ROYAL NUMISMATIC SOCIETY OF NEW ZEALAND. **"They Make Their Own Money."** New Zealand, 1950. 44 illustrations, 94 pp., cloth, 8vo. Limited ed. 12/6

Z242 CARY, M. **The History of the Greek World, from 323 to 146 B.C.** London, 1951. Maps, 446 pp., cloth, 8vo 25/-

Z243 **Catalogue of Canadian Coins, Tokens and Fractional Currency.** Toronto, 1952. Illustrated, wrappers, 8vo 10/9

Z244 CRAIG, Sir J. **The Mint:** A History of the London Mint from A.D. 287-1948. Cambridge, 1953. xvi plates, 450 pp., buckram, 8vo 70/-

Z245 — **Newton at the Mint.** Cambridge, 1946. 4 plates, 128 pp., cloth, 8vo 10/6

Z246 DAVENPORT, J. S. **European Crowns since 1800.** (excluding the German States). New York, 1947. Many illustrations in text, 193 pp., cloth, 8vo 35/-

Z247 — **German Talers since 1800.** Illustrations in text, 205 pp., cloth, 8vo 42/-

Z248 EINZIG, P. **Primitive Money.** London, 1951. 517 pp., cloth, 8vo 30/-

Z249 **English Historical Documents.** Vol. II, 1042-1189. Edit. Prof. D. C. Douglas and G. W. Greenaway. London, 1953. lxxix plates, 1014 pp., cloth, 9½" × 6½" 80/-

Z250 GORDON, Maj. L. L. **British Battles and Medals : Campaign Medals.** 1588-1946. Aldershot, 1950. Illustrated, some in colour, 294 pp., cloth, 8vo 63/-

Z251 GORDON-ROE, F. **The Bronze Cross.** A Tribute to those who won the Supreme Award for Valour in the years 1940-1945. London, 1953. 162 portraits in photogravure, 46 other illustrations, 124 pp., cloth, 8vo 10/6

Z252 GRANT, M. **The Six Main Aes Coinages of Augustus.** Edinburgh, 1953. xx plates, 178 pp.: cloth, 8vo 25/-

Z253 GROSE, S. W. **Catalogue of the McClean Collection of Greek Coins in the Fitzwilliam Museum.** 3 vols.—

Vol. I. *Western Europe*, Magna Graecia, Sicily, 1923. 111 plates, 380 pp., cloth £6/6/-

Vol. II. *The Greek Mainland, The Aegean Islands, Crete.* 1926. 137 plates, 563 pp., cloth £7/7/-

Vol. III. *Asia Minor, Further Asia, Egypt, Africa.* 1929. 132 plates, 507 pp., cloth £7/7/-

Z254 **Hamburger Beiträge zur Numismatik.** Published by Prof. Dr. Hävernik. Hamburg. Wrappers, 8vo.—

Vol. 3, 1949. 11/- ; Vol. 4, 1950. 13/6 ; Vol. 5, 1951, 6 plates, map, 133 pp. 13/6 ; Vol. 6 and 7, 1952-53 one vol.), 11 plates, 194 pp., 27/-

Z255 HANS, J. **Zwei Jahrhunderte Maria-Theresien-Taler.** 1751-1951. Illustrated, 66 pp., wrappers, 8vo 12/6

Z256 HEAD, B. V. **Historia Numorum.** Oxford, 1911 reprinted). cccxcix plates, 967 pp., cloth, cr. 8vo 84/-

Z257 HURLEY, C. **Russian Orders, Decorations and Medals :** including an Historical Résumé and Notes under the Monarchy. Windsor, 1934. 13 plates, some coloured, 90 pp., cloth, 8vo 21/-

Z258 JACOBS, N. and VERMUELE, C. C. **Japanese Coinage.** New York, 1953. Profusely illustrated, 142 pp., cloth, 8vo 55/-

Z259 JAMMER, Dr. V. **Die Anfänge der Münzprägung im Herzogtum Sachsen** (10 und 11 Jahrhundert). Hamburg, 1952. 2 vols., tables, charts and maps, wrappers, 8vo 45/-

Z260 JAEGER, K. **Die Deutschen Reichsmünzen.** Basel, 1948. With Supplement. Many illustrations, 96 pp., wrappers, sm. 8vo 17/6

Z261 KAPLAN, Dr. A. **Catalogue of the Coins of South Africa.** South Africa, 1950. Illustrations in text, 28 pp., wrappers, 8vo 15/-

Z262 — — — A de luxe edition in soft leather 30/-

Z263 LAFAURIE, J. **Les Monnaies des Rois de France.** Hugues Capet à Louis XII. 1951. 30 plates, 147 pp., wrappers, 4to 66/-

Z264 LAISTNER, M. L. W. **History of the Greek World, from 479 to 323 B.C.** London, 1947. Maps, 492 pp., cloth, 8vo 21/-

Z265 MACK, Commander R. P. **The Coinage of Ancient Britain.** London, 1953. xxix plates, 151 pp., cloth, 8vo 30/-

Z266 MACKENZIE, A. D. **The Bank of England Note.** Cambridge, 1953. xvi illustrations, 166 pp., cloth, 8vo 15/-

Z267 MATTINGLY, H. **Roman Empire :** Vol. III ; *Nerva to Hadrian.* London, 1936. 102 plates, 604 pp., cloth, thick 8vo 70/-

Z268 — — — — Vol. IV. *Antoninus Pius to Commodus.* London, 1940. 111 plates, 964 pp., cloth, 8vo £5

Z269 — — — — Vol. V. *Pertinax to Elagabalus.* London, 1950. 2 vols. (1 vol. plates), cloth, 8vo £7/10/-

Z270 MATTINGLY, H. and SYDENHAM, E. A. **Roman Imperial Coinage.**

	Cloth	Wrappers
Vol. I. Augustus to Vitellius. 16 plates, 279 pp.	32/6	25/-
Vol. III. Antoninus Pius to Commodus. 16 plates, 518 pp.	40/-	30/-
Vol. IV, Part 1. Pertinax to Geta. 16 plates, 406 pp.	35/-	25/-
Vol. IV, Part 2. Macrinus to Pupienus. 13 plates, 216 pp.	35/-	25/-
Vol. IV, Part 3. Gordian III to Uranius Antoninus. 16 plates, 246 pp.	50/-	42/6
Vol. V, Part 1. Valerian to Florian. 12 plates, 424 pp.	35/-	25/-
Vol. V, Part 2. Probus to Amandus. 20 plates, 710 pp.	60/-	50/-
Vol. IX. Valentinian I to Theodosius I. 16 plates, 334 pp.	80/-	

Z271 MAY, J. M. F. **The Coinage of Damastion.** Oxford, 1939. xii plates, 207 pp., cloth, 8vo 12/6

Z272 MAZARD, J. **Histoire Monétaire et Numismatique des Colonies et de L'Union Française, 1670-1952.** Paris, 1953. xvii plates, 202 pp., wrappers, cr. 8vo 50/-

Z273 **Medallic Illustrations of the History of Great Britain and Ireland.** 19 portfolios of clxxxiii plates, descriptions and indexes. London, 1911. Wrappers £6

Z274 MILLER ZU AICHHOLZ, A. LOEHR, E. HOLZMAIR. **Österreichische Münzprägungen, 1519-1938.** 2 vols. (1 vol. plates only), paper boards £6/10/-

Z275 MILNE, J. C. **Catalogue of Alexandrian Coins in the Ashmolean Museum.** Oxford, 1933. vii plates, 155 pp., cloth, 4to 42/-

Z276 MILNE, J. G. **Greek and Roman Coins**; and the Study of History. London, 1939. xvi plates, 128 pp., cloth, 8vo 6/-

Z277 — **Greek Coins.** Oxford, 1931. xii plates, 131 pp., cloth, 8vo 7/6

Z278 MILNE, SUTHERLAND, and THOMPSON. **Coin Collecting.** Oxford, 1951. xliv plates, 152 pp., cloth, 8vo. A useful book on coins generally, with many hints for the collector 9/6

Z279 ONSLOW, The Rt. Hon. Earl of. **The Dukes of Normandy and their Origin.** London, 1945. 21 illustrations, 176 pp., cloth, 8vo 18/-

Z280 PARSONS, H. A. **The Colonial Coinages of British Africa and the Adjacent Islands.** London, 1950. Illus. in text, 94 pp., wrappers 8/6

Z281 — **The Hammered Silver Coins of Elizabeth I.** London, 1947. Illustrations in text, 16 pp., wrappers 3/6

Z282 PREVITÉ-ORTON, C. W. **The Shorter Cambridge Medieval History.** 2 vols. Cambridge, 1952. Many illustrations, buckram, 8vo 55/-

Z283 QUIGGIN, A. H. **Primitive Money:** A Survey of Primitive Mediums of Exchange. London, 1949. 32 plates, 3 maps and many illustrations in text, 344 pp., cloth, 8vo 45/-

Z284 REIFENBERG, A. **Ancient Jewish Coins.** Jerusalem, 1947. xvi plates, 66 pp., cloth, 8vo 30/-

Z285 — — **Ancient Hebrew Seals.** London, 1950. 52 illustrations, 24 pp., Table of Alphabets, cloth, 8vo 12/6

Z286 — — **Israel's History in Coins:** From the Maccabees to the Roman Conquest. London, 1953. 49 illustrations, 17 pp., cloth, 8vo 10/6

Z287 **Royal Maundy.** An Interesting booklet on the Ancient Customs and Ceremonies concerning the Distribution of the Royal Maundy Money. Illustrated, 28 pp., wrappers, 8vo 2/6

Z288 **Royal Mint:** An Outline History. London, 1951. Several illustrations, 15 pp., wrappers 6d

Z289 SALMON, E. T. **A History of the Roman World, from 30 B.C. to A.D. 138.** London, 1950. Mars, 363 pp., cloth, 8vo 22/6

Z290 SCULLARD, H. H. **A History of the Roman World, from 753 to 146 B.C.** London, 1951. Maps, 470 pp., cloth, 8vo 32/6

Z291 — — **Roman Politics,** 220-150 B.C. Oxford, 1951. Frontispiece, 355 pp., cloth, 8vo 35/-

Z292 SELTMAN, C. **Masterpieces of Greek Coinage.** Oxford, 1948. Finely illustrated in text, 128 pp., cloth, 8vo 21/-

Z293 SUTHERLAND, C. H. V. **Coinages of Roman Imperial Policy:** 31 B.C. to A.D. 68. London, 1951. xvii plates, 210 pp., cloth, 8vo 21/-

Z295 SYDENHAM, E. A. **The Coinage of the Roman Republic.** London, 1952. 30 plates, 343 pp., buckram, cr. 8vo 70/-

Z296 — **Aes Grave: Coinages of Rome and Central Italy.** London, 1926. 28 plates, 145 pp., paper boards, 8vo 21/-

Sylloge Nummorum Graecorum:—

Z297 Vol. I, Pt. 1. Spencer Churchill and Salting Collections 10/-

Z298 Vol. I, Pt. 2. Newnham Davis Coins in Wilson Collection of Classic and Eastern Antiquities; Marishal Collection, Aberdeen 20/-

Z299 Vol. II, Pts. I-II. Lloyd Coll. Etruria-Thurium 20/-

Z300 Vol. II, Pts. III-IV. Lloyd Coll. Velia-Eryx. 20/-

Z301 Vol. II, Pts. V-VI. Lloyd Coll. Galaria-Selinus 16/-

Z302 Vol. II, Pts. VII-VIII. Lloyd Coll. Syracuse-Lipara 20/-

Z303 Vol. III, Pt. I. Lockett Coll. Spain-Italy (Gold and Silver) 20/-

Z304 Vol. III, Pt. 2. Lockett Coll. Sicily-Thrace (Gold and Silver) 20/-

Z305 Vol. III, Pt. 3. Lockett Coll. Macedonia-Aegina (Gold and Silver) 20/-

Z306 Vol. III, Pt. 4. Lockett Coll. Peloponnese-Aeolis (Gold and Silver) 20/-

Z307 Vol. III, Pt. 5. Lockett Coll. Lesbos-Cyrenaica; Addenda (Gold and Silver) 50/-

Z308 Vol. IV, Pt. 1. Fitzwilliam Mus. Leake. General Collection. Spain-Italy 20/-

Z309 Vol. IV, Pt. 2. Fitzwilliam Mus. Leake. General Collection. Sicily-Thrace 42/-

Z310 Vol. IV, Pt. 3. Fitzwilliam Mus. Leake. General Collection. Macedonia-Acarnania 52/6

Z311 Vol. V, Pt. 1. Ashmolean Museum and Evans Collections. Italy 25/-

This work was published by the British Academy, 1931-1951. *Each part* 16 × 12 *inches is in cartridge covers and consists of collotype plates of coins in collections named, each with descriptions on opposite page.*

Z312 TARN, W. W. **The Greeks in Bactria and India.** Cambridge, 1951. Plate and map, 561 pp., cloth, 8vo 50/-

Z313 TESTA, G. S. **Ducatoni, Piastre, Scudi, Talleri e Loro Multipli,** Part 1. **Casa Savoia.** Rome, 1951. Illustrated in text, 74 pp., cloth, 8vo 20/-

Z314 — — Part II. **I Romani Pontefici.** Rome, 1952. Illustrated in text, 156 pp., cloth, 8vo 32/6

Z315 VAZ, J. F. **Catalogo Das Moedas Portuguesas :** Portugal Continental 1640-1948. Lisbon, 1948. Many plates and illustrations in text, 246 pp., 4to. Stiff wrappers 66/–, paper wrappers 52/6

Z316 **The Oxford Classical Dictionary.** Oxford, 1953. 971 pp., cloth, cr. 8vo 50/–

The Oxford History of England :

Z317 Vol. I. Roman Britain and the English Settlements. R. G. Collingwood and J. N. L. Myres. Maps, 515 pp., cloth, 8vo 25/–

Z318 Vol. II. Anglo-Saxon England : *c.* 550-1087. Sir F. Stenton. Maps, 747 pp., cloth,) 8vo 25/–

Z319 Vol. III. From Domesday Book to Magna Carta : 1087-1216. A. L. Poole. Maps, 541 pp., cloth, 8vo 25/–

Z320 Vol. VII. The Earlier Tudors : 1845-1558. J. D. Mackie. Maps, 699 pp., cloth, 8vo 25/–

Z321 Vol. VIII. The Reign of Elizabeth I. J. B. Black. Maps, 448 pp., cloth, 8vo 25/–

Z322 Vol. IX. The Early Stuarts : 1603-1660. Godfrey Davies. Maps, 451 pp., cloth, 8vo 25/–

Z323 Vol. X. The Later Stuarts : 1660-1714. G. N. Clark. Maps, 461 pp., cloth, 8vo 25/–

Z324 Vol. XI. The Whig Supremacy : 1714-1760. Basil Williams. Maps, 464 pp., cloth, 8vo 25/–

Z325 Vol. XIII. The Age of Reform : 1815-1870. E. L. Woodward. Maps, 8vo, cloth 25/–

Z326 Vol. XIV. England : 1870-1914. R. C. K. Ensor. Maps, 8vo, cloth, 8vo 25/–
This work is complete in 14 volumes but volumes 4, 5, 6 and 12 still remain to be published.

ELIZABETH II COINAGES.

BRITISH or IMPERIAL 1953

Proof sets. None yet available. Issue very over-subscribed.
Non-proof sets in plastic cases (5/– to ¼d.) ; 21/– inland ; $3.25 U.S.A.; 25/– elsewhere.
Non-proof coins (2/6 *to* ¼d.) *in envelope.* 12/6 included ; 14/– or $2 overseas.
Coronation crowns, in plastic case. 8/6 inland ; 9/– or $1.30 overseas.
Maundy Money, 1953. A few of these very rare little sets (consisting of fourpence, threepence, twopence and penny). These are the only British coins struck in fine (.925) silver. £13/10/–.

SOUTH AFRICA, 1953.

The following will be available in the autumn and we are now booking orders for them :—
Full proof set (£1 to ¼d.) in case, £14/15/–
Proof sovereign and half-sovereign in case, £12/15/–
Proof sovereign and half-sovereign without case, £12
Proof sovereign, £8
Proof half-sovereign, £4/10/–
Proof short set (5/– to ¼d) in case, £3
Ordinary set (5/– to ¼d), 20/– inland, 21/– or $3 Commonwealth and U.S.A., 22/6 elsewhere
Ordinary crown (uncirculated), 7/6 inland, 8/– Commonwealth and U.S.A., 8/6 elsewhere
N.B.—The gold is the only gold of Queen Elizabeth available.

NEW ZEALAND, 1953 (Ready about December—i.e. Royal Visit)

Proof sets (5/– to ½d.), number limited, 26/6 inland, 28/– or $4 abroad

AUSTRALIA, 1953.

Ordinary florin, 3/6

CONVERSION TABLE

s. d.	U.S. $ c.	s. d.	U.S. $ c.	s. d.	U.S. $ c.
6	.07	50/–	7.05	£9	25.38
1/–	.15	60/– (£3)	8.46	£10	28.20
2/–	.29	70/–	9.87	£20	56.40
2/6	.36	80/– (£4)	11.28	£30	84.60
3/–	.43	90/–	12.69	£40	112.80
4/–	.57	£5	14.10	£50	141.00
5/–	.71	£5/10/–	15.51	£60	169.20
10/–	1.41	£6	16.92	£70	197.40
15/–	2.12	£6/10/–	18.33	£80	225.60
20/– (£1)	2.82	£7	19.74	£90	252.80
30/–	4.23	£8	22.56	£100	282.00
40/– (£2)	5.64				

When sending dollar cheques, please add 20 cents for Banker's handling charge.

SEABY'S NUMISMATIC PUBLICATIONS

THE STORY OF THE ENGLISH COINAGE. By Peter Seaby.
An interesting and very readable book, covering the whole period from Ancient British times right up to 1951. 110 pp., 245 illus., 6 maps. Cloth, 10/6.

ROMAN SILVER COINS, Vol. I. By H. A. Seaby.
Part I. **The Republic** arranged according to Babelon. 877 coins listed, 550 coins illustrated. Paper covers, 10/6.

Part II. **Julius Caesar to Augustus** arranged according to Cohen. 553 coins listed, 237 coins illustrated. Paper covers, 7/-.
Parts I and II bound together in Cloth, 21/-.

STANDARD CATALOGUE OF THE COINS OF GREAT BRITAIN AND IRELAND. Every coin priced. Cloth Bound, 12/6.

NOTES ON ENGLISH SILVER COINS, 1066-1648, to help collectors in their classification. Vol. I. Stiff Paper covers, 5/-. Cloth Bound, 10/-.

ENGLISH SILVER COINAGE, 1649-1949, by H. A. Seaby.
The standard reference work on this series. All types and dates listed with rarity of each piece. Stiff Paper covers, 10/- ; interleaved with squared paper, 12/6.
Cloth Bound, 15/- ; interleaved with squared paper, 17/6.

A CATALOGUE OF THE COPPER COINS AND TOKENS OF THE BRITISH ISLES, with their value. Compiled by H. A. Seaby and P. J. Seaby.
Stiff Paper covers, 5/- ; interleaved with squared paper, 7/6. Cloth Bound, 10/-.

THE COINAGE OF ROMAN BRITAIN, by Gilbert Askew, F.S.A.
The most comprehensive work on this series, comprising the known coins of Roman Britain and several here recorded for the first time. Over 900 coins described and full historical text. 87 illustrations, maps. Cloth Bound, 12/6.

A CATALOGUE OF GREEK COINS, compiled by Gilbert Askew, F.S.A.
2,185 coins described, many illustrations and maps. Stiff Paper covers, 7/6.
Cloth Bound, 12/6.

CM1. R. Heraldic flowers in quatrefoil.

(a)	3 inch size in 9 carat gold	*Inland* £100, *Overseas* £75 or $212
(b)	,, ,, in silver	*Inland* £13, *Overseas* £10 or $28.50
(c)	,, ,, in bronze	*Inland and Overseas* 32/6 or $4.65
(d)	Gold blocked leatherette cases for (a), (b) and (c)	15/– or $2.20 extra
(e)	2 inch size in 9 carat gold	*Inland* £30, *Overseas* £22/10/– or $64
(f)	,, ,, in silver	*Inland* £3/5/–, *Overseas* £2/7/6 or $7
(g)	,, ,, in bronze	*Inland and Overseas* 14/– or $2
(h)	Gold blocked leatherette cases for (e), (f) and (g)	10/6 or $1.50 extra
(i)	1¼ inch size in 9 carat gold	*Inland* £10, *Overseas* £6/10/– or $18.50
(k)	,, ,, in silver	*Inland* £1/5/–, *Overseas* £1 or $3
(l)	,, ,, in bronze	*Inland and Overseas* 7/– or $1
(m)	Gold blocked leatherette case for (i), (k) and (l)	8/6 or $1.25 extra

CM2. R. Britannia and lion, etc.

(a) to (m) Prices exactly the same as CM1 (a) to (m).

Postage extra on all orders under £2 or $5.65
The dollar equivalents all include Banker's handling charges.
When ordering please give number and price

CM4. Uncrowned head, in high relief. R. Ship of State.

(a) In 9 carat gold — *Inland* £20, *Overseas* £15 or $42.50
(b) In silver, oxydised finish — *Inland* £1/5/–, *Overseas* £1 or $3
(c) In oxydised bronze — *Inland and Overseas* 5/– or $.75

CM5. Crowned bust, without legend. R. Tudor rose.

(a) In 9 carat gold — *Inland* £14/10/–, *Overseas* £10/15/– or $30.50
(b) In silver — *Inland* £1, *Overseas* 16/– or $2.25
(c) In oxydised bronze — *Inland and Overseas* 4/6 or $.65
(d) In bright bronze — *Inland and Overseas* 3/3 or $.50

CM6. Legend, small crowned bust. R. Westminster Abbey.

(a), (b), (c), (d) Prices exactly the same as CM5 (a) to (d).

Each is 1⅜″ size and in attractive box.
Postage extra on all orders under £2 or $5.65
The dollar equivalents all include Banker's handling charges.
When ordering please give number and price

Printed in England by Robert Stockwell Ltd., 5-13, Baden Place, London, S.E.1
and published by B. A. Seaby, Ltd., 65, Great Portland Street W.1.